DECK6LVYYVG

RAB



Enhance your deck with our aluminum landscape light, polyester powder coat finish designed for durability. This versatile fixture can be used as a step light or traditional rail placement. Equivalent to 20W halogen, FERN has a 100,000 hour LED lifespan.

Color: Verde green

Weight: 1.4 lbs

Project:	**Type:**
Prepared By:	**Date:**

Driver Info

Type	Constant Current
120V	N/A
208V	N/A
240V	N/A
277V	N/A
Input Watts	6.1W

LED Info

Watts	6W
Color Temp	2700K (Residential Warm)
Color Accuracy	80 CRI
L70 Lifespan	100,000 Hours
Lumens	333 lm
Efficacy	54.6 lm/W

Technical Specifications

Compliance

UL Listed:
Suitable for wet locations. Suitable for mounting within 4 ft of the ground.

IESNA LM-79 & LM-80 Testing:
RAB LED luminaires and LED components have been tested by an independent laboratory in accordance with IESNA LM-79 and LM-80.

IP Rating:
Ingress protection rating of IP66 for dust and water

Electrical

System Transformer:
No driver needed. Multi-tap magnetic transformer with 60 Hz only (sold separately). 054A.

Performance

Lifespan:
100,000-Hour LED lifespan based on IES LM-80 results and TM-21 calculations

LED Characteristics

LEDs:
Long-life, high-efficacy, surface-mount LEDs

Color Stability:
LED color temperature is warrantied to shift no more than 200K in color temperature over a 5-year period

Color Uniformity:
RAB's range of Correlated Color Temperature follows the guidelines of the American National Standard for Specifications for the Chromaticity of Solid State Lighting (SSL) Products, ANSI C78.377-2017.

Construction

Cold Weather Starting:
The minimum starting temperature is -30°C/-34°F

Housing:
Precision die-cast aluminum housing

Lens:
Tempered glass

Gaskets:
High-temperature EPDM foam silicone

Finish:
Formulated for high durability and long-lasting color

Green Technology:
Mercury and UV free. RoHS-compliant components.

Installation

Mounting:
Shade slides over surface mounting plate

Copyright © 2025 RAB Lighting All Rights Reserved Note: Specifications are subject to change at any time without notice

DECK6LVYYVG

Dimensions

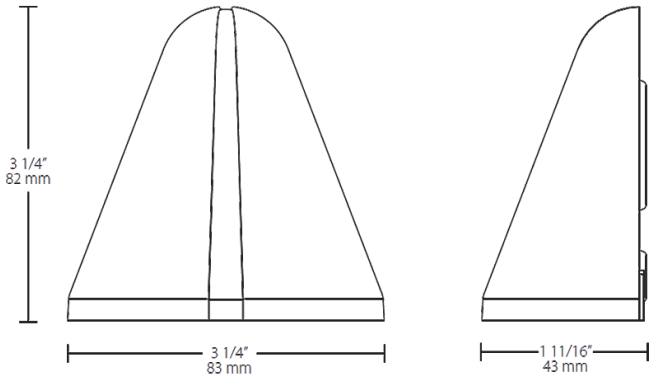

Features

- Compatible with 12VAC systems
- Can be used as steplights
- 100,000-Hour lifespan

Ordering Matrix

Family	Wattage	Color Temp	Finish
DECK	6LV	YY	VG
	6LV = 6W 12VAC	**YY =** 2700K Residential Warm	**A =** Bronze **B =** Black **D =** Sand **W =** White **VG =** Verde Green

Copyright © 2025 RAB Lighting All Rights Reserved Note: Specifications are subject to change at any time without notice