GLED52YBB/BL



52 Watts of energy efficient LED garage lighting replaces 175 Watt Metal Halide. 100,000 hour LED lifespan. 5-year, no-compromise warranty. High-performance output maximizes spacing criterion.

Color: Bronze

Weight: 23.2 lbs

Project:	**Type:**
Prepared By:	**Date:**

Driver Info

Type	Constant Current
120V	0.45A
208V	0.29A
240V	0.25A
277V	0.20A
Input Watts	53.7W

LED Info

Watts	52W
Color Temp	3000K (Warm)
Color Accuracy	72 CRI
L70 Lifespan	100,000 Hours
Lumens	5,883 lm
Efficacy	109.6 lm/W

Technical Specifications

Compliance

UL Listed:
Suitable for Wet Locations. Covered Ceiling Mount Only.

IESNA LM-79 & LM-80 Testing:
RAB LED luminaires and LED components have been tested by an independent laboratory in accordance with IESNA LM-79 and LM-80.

DLC Listed:
This product is on the Design Lights Consortium (DLC) Qualified Products List and is eligible for rebates from DLC Member Utilities. Designed to meet DLC 5.1 requirements.
DLC Product Code: P3GH6DF7

Performance

Lifespan:
100,000-Hour LED lifespan based on IES LM-80 results and TM-21 calculations

Wattage Equivalency:
Equivalent to 175W Metal Halide

LED Characteristics

LEDs:
4x13W high-output, long-life LEDs

Color Consistency:
3-step MacAdam Ellipse binning to achieve consistent fixture-to-fixture color

Color Stability:
LED color temperature is warrantied to shift no more than 200K in color temperature over a 5-year period

Color Uniformity:
RAB's range of Correlated Color Temperature follows the guidelines of the American National Standard for Specifications for the Chromaticity of Solid State Lighting (SSL) Products, ANSI C78.377-2017.

Construction

Cold Weather Starting:
The minimum starting temperature is -40°C (-40°F)

Maximum Ambient Temperature:
Suitable for use in up to 40°C (104°F)

Thermal Management:
Superior heat sinking with integrated air-flow fins

Housing:
Precision die-cast aluminum housing and door frame

Back Box:
The ceiling backbox is perfect for adding sensors or making splices to the GLED™ family of products. Surface mounts over any shape box and covers unsightly stains or gaps. Five (1/2") conduit entries enable wiring directly from the back or through the sides using surface conduit.

Lens:
Prismatic polycarbonate lens

Reflector:
Specular vacuum-metallized polycarbonate with ultra-white, 97% reflective optics

Gaskets:
High-temperature silicone

Finish:
Formulated for high durability and long-lasting color

Green Technology:
Mercury and UV free. RoHS-compliant components.

Installation

Mounting:
Easy hanging plate with hooks for ceiling mount

Copyright © 2025 RAB Lighting All Rights Reserved Note: Specifications are subject to change at any time without notice

Technical Specifications (continued)

Other

Bi-Level Operation:
Allows 50% and 100% output modes

Patents:
The design of GLED52 is protected by patents pending in US, Canada, China, Taiwan and Mexico

Warranty:
RAB warrants that our LED products will be free from defects in materials and workmanship for a period of five (5) years from the date of delivery to the end user, including coverage of light output, color stability, driver performance and fixture finish. RAB's warranty is subject to all terms and conditions found at rablighting.com/warranty.

Optical

BUG Rating:
B2 U3 G1

Electrical

Driver:
Driver: Constant Current, Class 2, 120V-277V, 50/60 Hz, 6kv Surge Protection, 120V: 0.45A, 208V: 0.29A, 240V: 0.25A, 277V: 0.20A

THD:
3.2% at 120V, 6.08% at 277V

Power Factor:
99.9% at 120V, 96.5% at 277V

Dimensions

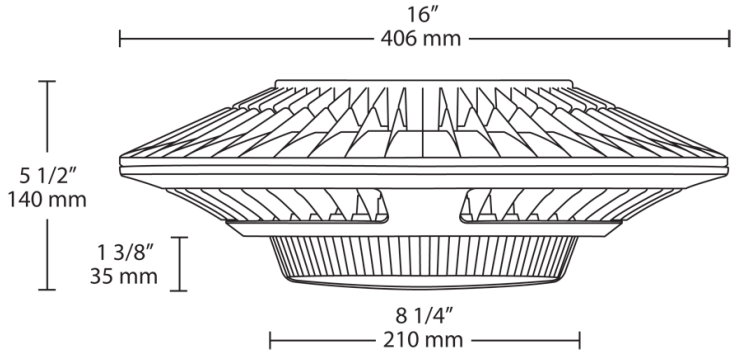

Features

- Low-profile design Ideal for Parking Garages
- 52W Replaces 175W MH Luminaires
- 100,000-hour LED lifespan based on IES LM-80 results and TM-21 calculations
- Up to 25% Reduction in Fixture Count
- Lock screw provided for pendant mount

Copyright © 2025 RAB Lighting All Rights Reserved Note: Specifications are subject to change at any time without notice

GLED52YBB/BL

Ordering Matrix

Family	Wattage	Color Temp	Back Box	Finish	Driver
GLED	52	Y	BB		/BL
	52 = 52W **78 =** 78W **26 =** 26W	**Blank =** 5000K Cool **N =** 4000K Neutral **Y =** 3000K Warm	**Blank =** No Backbox **BB =** Back Box	**Blank =** Bronze **W =** White	**Blank =** No Option **/D10 =** 0-10V Dimming **/480 =** 480V **/480/D10 =** 480V w/0-10V Dimming **/BL =** Bi-Level

Copyright © 2025 RAB Lighting All Rights Reserved Note: Specifications are subject to change at any time without notice