# GN2LED13NRAC11B

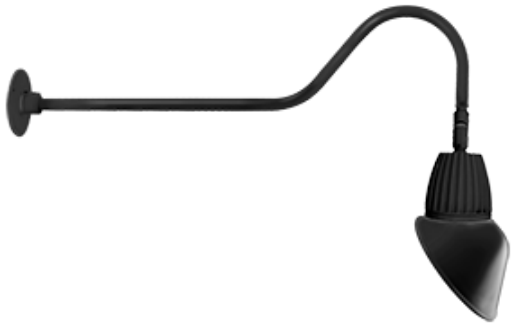

13 & 26 Watt Angled Cone Shade LED Gooseneck Luminaire designed to match the architecture of Main Street storefronts and building perimeters. LED Gooseneck Cone Shade with 35" Goose Arm Style 2.

Color: Black

Weight: 14.0 lbs

| | |
|---|---|
| **Project:** | **Type:** |
| **Prepared By:** | **Date:** |

### Driver Info

| | |
|---|---|
| Type | Constant Current |
| 120V | 0.3A |
| 208V | 0.3A |
| 240V | 0.3A |
| 277V | 0.15A |
| Input Watts | 15.2W |

### LED Info

| | |
|---|---|
| Watts | 13W |
| Color Temp | 4000K (Neutral) |
| Color Accuracy | 87 CRI |
| L70 Lifespan | 100,000 Hours |
| Lumens | 388 lm |
| Efficacy | 25.5 lm/W |

## Technical Specifications

### Compliance

**UL Listed:**
Suitable for wet locations. Suitable for mounting within 4ft (1.2m) of the ground.

**IESNA LM-79 & LM-80 Testing:**
RAB LED luminaires and LED components have been tested by an independent laboratory in accordance with IESNA LM-79 and LM-80.

### Performance

**Lifespan:**
100,000-Hour LED lifespan based on IES LM-80 results and TM-21 calculations

**Wattage Equivalency:**
Equivalent to 75W Incandescent, 50W Metal Halide or 18W CFL

### Construction

**Fixture:**
The GN2LED13NRAC11B comes with the GOOSE2B Arm

**Housing:**
Precision die-cast aluminum housing, lens frame and mounting plate

**Gaskets:**
High-temperature Silicone

**Cold Weather Starting:**
The minimum starting temperature is -40°C (-40°F)

**Shades:**
11" Angled Cone Shade offered

**Finish:**
Formulated for high durability and long-lasting color

**Green Technology:**
Mercury and UV free. RoHS-compliant components.

### LED Characteristics

**LED:**
Single multi-chip, 13W high-output, long-life LED

**Color Stability:**
LED color temperature is warrantied to shift no more than 200K in color temperature over a 5-year period

**Color Uniformity:**
RAB's range of Correlated Color Temperature follows the guidelines of the American National Standard for Specifications for the Chromaticity of Solid State Lighting (SSL) Products, ANSI C78.377-2017.

### Installation

**Mounting:**
Heavy-duty mounting arm with "O" ring seal and stainless steel screw

### Electrical

**Driver:**
Constant Current, Class 2, 100-277V, 50/60 Hz, 100-240VAC 0.3 - 0.15A, 277VAC 0.15A, THD ≤20%, PF 97.5%.

**Surge Protection:**
4kV

### Other

**Patents:**
The design of the Gooseneck is protected by patents pending in US, Canada, China and Taiwan

**Warranty:**
RAB warrants that our LED products will be free from defects in materials and workmanship for a period of five (5) years from the date of delivery to the end user, including coverage of light output, color stability, driver performance and fixture finish. RAB's warranty is subject to all terms and conditions found at rablighting.com/warranty.


Copyright © 2025 RAB Lighting All Rights Reserved Note: Specifications are subject to change at any time without notice

# GN2LED13NRAC11B

## Dimensions

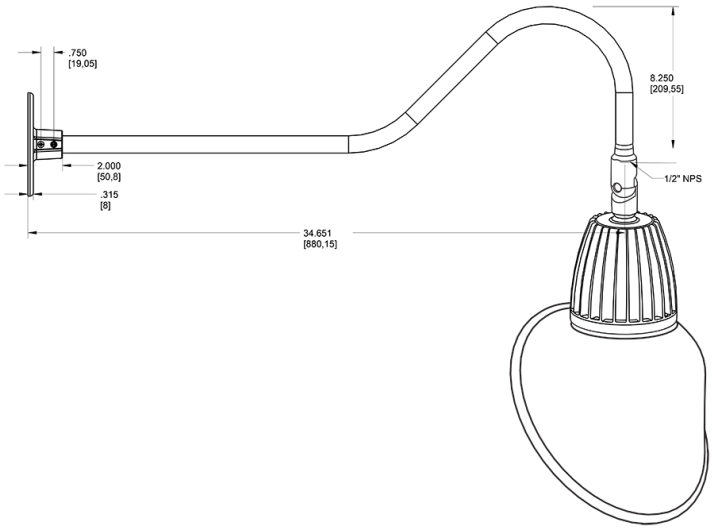


## Features

- Adjustable 45° swivel joint
- Superior heat sink
- Die-cast aluminum housing
- 5-Year, No-Compromise Warranty

## Ordering Matrix

| Family | Wattage | Color Temp | Reflector | Shade | ShadeSize | Finish |
|---|---|---|---|---|---|---|
| GN2LED | 13 | N | R | AC | 11 | B |
| | **26 =** 26W<br>**13 =** 13W | **Y =** 3000K Warm<br>**N =** 4000K Neutral | **Blank =** Flood<br>**R =** Rectangular<br>**S =** Spot | **AC =** Angled Cone | **11 =** 11"<br>**Blank =** 15" | **R =** Red<br>**I =** Ivory<br>**BWN =** Brown<br>**BL =** Royal Blue<br>**LB =** Light Blue<br>**YL =** Yellow<br>**G =** Hunter Green<br>**S =** Silver<br>**A =** Bronze<br>**W =** White<br>**B =** Black |


Copyright © 2025 RAB Lighting All Rights Reserved Note: Specifications are subject to change at any time without notice