GN3LED26YRST11B



13 & 26 Watt Straight Shade LED Gooseneck Luminaire designed to match the architecture of Main Street storefronts and building perimeters. LED Gooseneck Straight Shade with Upcurve 30" High, 25" from Wall Goose Arm Style 3.

Color: Black

Weight: 14.0 lbs

Project:	**Type:**
Prepared By:	**Date:**

Driver Info

Type	Constant Current
120V	0.25A
208V	0.16A
240V	0.14A
277V	0.12A
Input Watts	29.2W

LED Info

Watts	26W
Color Temp	3000K (Warm)
Color Accuracy	82 CRI
L70 Lifespan	100,000 Hours
Lumens	1,262 lm
Efficacy	43.2 lm/W

Technical Specifications

Compliance

UL Listed:
Suitable for wet locations. Suitable for mounting within 4ft (1.2m) of the ground.

IESNA LM-79 & LM-80 Testing:
RAB LED luminaires and LED components have been tested by an independent laboratory in accordance with IESNA LM-79 and LM-80.

Performance

Lifespan:
100,000-Hour LED lifespan based on IES LM-80 results and TM-21 calculations

Wattage Equivalency:
Equivalent 120W Incandescent, 75W Metal Halide or 42W CFL

Construction

Fixture:
The GN3LED26YRST11B comes with the GOOSE3B Arm

Housing:
Precision die-cast aluminum housing, lens frame and mounting plate

Gaskets:
High-temperature Silicone

Cold Weather Starting:
The minimum starting temperature is -40°C (-40°F)

Shades:
11" Straight Shade offered

Finish:
Formulated for high durability and long-lasting color

Green Technology:
Mercury and UV free. RoHS-compliant components.

LED Characteristics

LED:
Single multi-chip, 26W high-output, long-life LED

Color Stability:
LED color temperature is warrantied to shift no more than 200K in color temperature over a 5-year period

Color Uniformity:
RAB's range of Correlated Color Temperature follows the guidelines of the American National Standard for Specifications for the Chromaticity of Solid State Lighting (SSL) Products, ANSI C78.377-2017.

Installation

Mounting:
Heavy-duty mounting arm with "O" ring seal and stainless steel screw

Electrical

Driver:
Constant Current, Class 2, 100-277V, 50/60 Hz, 0.48 A, THD≤20%, PF 97.9%.

Surge Protection:
4kV

Other

Patents:
The design of the Gooseneck is protected by patents pending in US, Canada, China and Taiwan

Warranty:
RAB warrants that our LED products will be free from defects in materials and workmanship for a period of five (5) years from the date of delivery to the end user, including coverage of light output, color stability, driver performance and fixture finish. RAB's warranty is subject to all terms and conditions found at rablighting.com/warranty.

Copyright © 2025 RAB Lighting All Rights Reserved Note: Specifications are subject to change at any time without notice

GN3LED26YRST11B

Dimensions

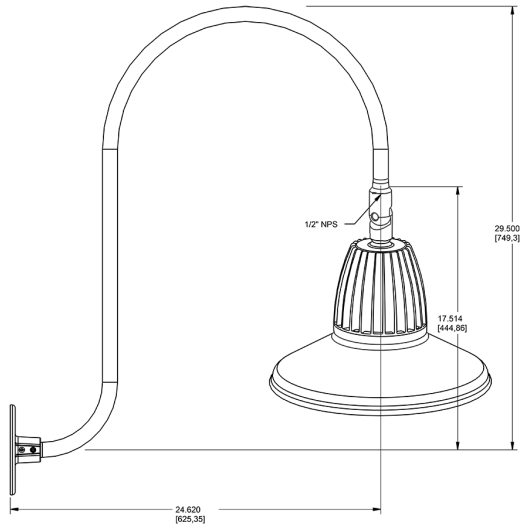

Features

- Adjustable 45° swivel joint
- Superior heat sink
- Die-cast aluminum housing
- 5-Year, No-Compromise Warranty

Ordering Matrix

Family	Wattage	Color Temp	Reflector	Shade	ShadeSize	Finish
GN3LED	26	Y	R	ST	11	B
	26 = 26W **13 =** 13W	**Y =** 3000K Warm **N =** 4000K Neutral	**Blank =** Flood **R =** Rectangular **S =** Spot	**ST =** Straight Shade	**11 =** 11" **Blank =** 15"	**R =** Red **I =** Ivory **BWN =** Brown **BL =** Royal Blue **LB =** Light Blue **YL =** Yellow **G =** Hunter Green **S =** Silver **A =** Bronze **W =** White **B =** Black

Copyright © 2025 RAB Lighting All Rights Reserved Note: Specifications are subject to change at any time without notice