GPLED26NW



78 Watts of energy efficient LED garage lighting replaces 250 Watt Metal Halide. 100,000 hour LED lifespan. 5 year warranty. High-performance output maximizes spacing criterion.

Color: White

Weight: 18.2 lbs

Project:	**Type:**
Prepared By:	**Date:**

Driver Info

Type	Constant Current
120V	0.23A
208V	0.15A
240V	0.13A
277V	0.10A
Input Watts	26.4W

LED Info

Watts	26W
Color Temp	4000K (Neutral)
Color Accuracy	71 CRI
L70 Lifespan	100,000 Hours
Lumens	3,189 lm
Efficacy	120.8 lm/W

Technical Specifications

Compliance

UL Listed:
Suitable for wet locations

IP Rating:
Ingress protection rating of IP66 for dust and water

IESNA LM-79 & LM-80 Testing:
RAB LED luminaires and LED components have been tested by an independent laboratory in accordance with IESNA LM-79 and LM-80.

DLC Listed:
This product is on the Design Lights Consortium (DLC) Qualified Products List and is eligible for rebates from DLC Member Utilities. Designed to meet DLC 5.1 requirements.
DLC Product Code: PNDES2M9

Performance

Lifespan:
100,000-Hour LED lifespan based on IES LM-80 results and TM-21 calculations

Electrical

Driver:
Driver: Constant Current, Class 2, 120V-277V, 50/60 Hz, 6kv Surge Protection, 120V: 0.23A, 208V: 0.15A, 240V: 0.13A, 277V: 0.10A

Dimming Driver:
Driver includes dimming control wiring for 0-10V dimming systems. Requires separate 0-10V DC dimming circuit. Dims down to 10%.

THD:
5.65% at 120V, 6.74% at 277V

Power Factor:
99.6% at 120V, 95.5% at 277V

LED Characteristics

LEDs:
High-output, long-life LEDs

Color Consistency:
3-step MacAdam Ellipse binning to achieve consistent fixture-to-fixture color

Color Stability:
LED color temperature is warrantied to shift no more than 200K in color temperature over a 5-year period

Color Uniformity:
RAB's range of Correlated Color Temperature follows the guidelines of the American National Standard for Specifications for the Chromaticity of Solid State Lighting (SSL) Products, ANSI C78.377-2017.

Construction

Cold Weather Starting:
The minimum starting temperature is -40°C (-40°F)

Maximum Ambient Temperature:
Suitable for use in up to 40°C (104°F)

Thermal Management:
Superior heat sinking with integrated air-flow fins

Housing:
Precision die-cast aluminum housing and door frame

Lens:
Prismatic polycarbonate lens

Reflector:
Semi-specular anodized aluminum with ultra-white, 97% reflective optics

Gaskets:
High-temperature silicone

Finish:
Formulated for high durability and long-lasting color

Green Technology:
Mercury and UV free. RoHS-compliant components.

Copyright © 2025 RAB Lighting All Rights Reserved Note: Specifications are subject to change at any time without notice

Technical Specifications (continued)

Installation

Mounting:
Pendant provided by others. Threads are 1/2 inch NPS. Stem insertion depth not to exceed 5/8 inch. Lock screw provided on fixture.

Other

Patents:
The design of GPLED26 is protected by patents pending in US, Canada, China, Taiwan and Mexico

Warranty:
RAB warrants that our LED products will be free from defects in materials and workmanship for a period of five (5) years from the date of delivery to the end user, including coverage of light output, color stability, driver performance and fixture finish. RAB's warranty is subject to all terms and conditions found at rablighting.com/warranty.

Optical

BUG Rating:
B2 U3 G1

Dimensions

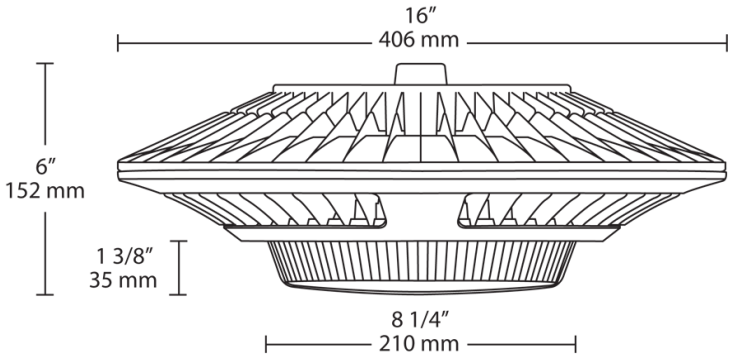

Features

- Low-profile design Ideal for Parking Garages
- 78W Replaces 250W MH Luminaires
- 100,000-hour LED lifespan based on IES LM-80 results and TM-21 calculations
- Up to 25% Reduction in Fixture Count
- Lock screw provided for pendant mount

Copyright © 2025 RAB Lighting All Rights Reserved Note: Specifications are subject to change at any time without notice

Ordering Matrix

Family	Wattage	Color Temp	Back Box	Finish	Driver
GPLED	26	N		W	
	52 = 52W **78 =** 78W **26 =** 26W	**Blank =** 5000K Cool **N =** 4000K Neutral **Y =** 3000K Warm	**Blank =** No Backbox **BB =** Back Box	**Blank =** Bronze **W =** White	**Blank =** No Option **/D10 =** 0-10V Dimming **/480 =** 480V **/480/D10 =** 480V w/0-10V Dimming **/BL =** Bi-Level

Copyright © 2025 RAB Lighting All Rights Reserved Note: Specifications are subject to change at any time without notice