# GPLED52W/480



78 Watts of energy efficient LED garage lighting replaces 250 Watt Metal Halide. 100,000 hour LED lifespan. 5 year warranty. High-performance output maximizes spacing criterion.

Color: White

Weight: 18.3 lbs

| | |
|---|---|
| **Project:** | **Type:** |
| **Prepared By:** | **Date:** |

### Driver Info

| | |
|---|---|
| Type | Constant Current |
| 120V | N/A |
| 208V | N/A |
| 240V | N/A |
| 277V | N/A |
| Input Watts | 52.4W |

### LED Info

| | |
|---|---|
| Watts | 52W |
| Color Temp | 5100K (Cool) |
| Color Accuracy | 71 CRI |
| L70 Lifespan | 100,000 Hours |
| Lumens | 5,940 lm |
| Efficacy | 113.4 lm/W |

## Technical Specifications

### Compliance

**UL Listed:**
Suitable for wet locations

**IESNA LM-79 & LM-80 Testing:**
RAB LED luminaires and LED components have been tested by an independent laboratory in accordance with IESNA LM-79 and LM-80.

**DLC Listed:**
This product is on the Design Lights Consortium (DLC) Qualified Products List and is eligible for rebates from DLC Member Utilities. Designed to meet DLC 5.1 requirements.
DLC Product Code: PMJE9UC2

### Performance

**Lifespan:**
100,000-Hour LED lifespan based on IES LM-80 results and TM-21 calculations

**Wattage Equivalency:**
Equivalent to 175W Metal Halide

### Electrical

**Driver:**
Driver: Constant Current, Class 2, 480V, 50/60 Hz, 6kv Surge Protection, 480V: 0.12A

**Dimming Driver:**
Driver includes dimming control wiring for 0-10V dimming systems. Requires separate 0-10V DC dimming circuit. Dims down to 10%.

**THD:**
7.52% at 480V

**Power Factor:**
88.8% at 480V

### LED Characteristics

**LEDs:**
4x13W high-output, long-life LEDs

**Color Consistency:**
7-step MacAdam Ellipse binning to achieve consistent fixture-to-fixture color

**Color Stability:**
LED color temperature is warrantied to shift no more than 200K in color temperature over a 5-year period

**Color Uniformity:**
RAB's range of Correlated Color Temperature follows the guidelines of the American National Standard for Specifications for the Chromaticity of Solid State Lighting (SSL) Products, ANSI C78.377-2017.

### Construction

**Cold Weather Starting:**
The minimum starting temperature is -40°C (-40°F)

**Maximum Ambient Temperature:**
Suitable for use in up to 40°C (104°F)

**Thermal Management:**
Superior heat sinking with integrated air-flow fins

**Housing:**
Precision die-cast aluminum housing and door frame

**Lens:**
Prismatic polycarbonate lens

**Reflector:**
Specular vacuum-metallized polycarbonate with ultra-white, 97% reflective optics

**Gaskets:**
High-temperature silicone

**Finish:**
Formulated for high durability and long-lasting color

**Green Technology:**
Mercury and UV free. RoHS-compliant components.


Copyright © 2025 RAB Lighting All Rights Reserved Note: Specifications are subject to change at any time without notice

## Technical Specifications (continued)

### Installation

**Mounting:**
Pendant provided by others. Threads are 1/2 inch NPS. Stem insertion depth not to exceed 5/8 inch. Lock screw provided on fixture.

### Other

**Patents:**
The design of GPLED52 is protected by patents pending in US, Canada, China, Taiwan and Mexico

**Warranty:**
RAB warrants that our LED products will be free from defects in materials and workmanship for a period of five (5) years from the date of delivery to the end user, including coverage of light output, color stability, driver performance and fixture finish. RAB's warranty is subject to all terms and conditions found at rablighting.com/warranty.

### Optical

**BUG Rating:**
B3 U3 G2

### Dimensions

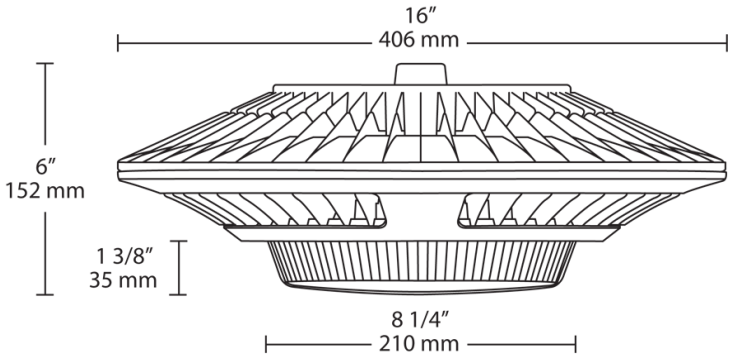


### Features

- Low-profile design Ideal for Parking Garages
- 78W Replaces 250W MH Luminaires
- 100,000-hour LED lifespan based on IES LM-80 results and TM-21 calculations
- Up to 25% Reduction in Fixture Count
- Lock screw provided for pendant mount


Copyright © 2025 RAB Lighting All Rights Reserved Note: Specifications are subject to change at any time without notice

# GPLED52W/480

### Ordering Matrix

| Family | Wattage | Color Temp | Back Box | Finish | Driver |
|---|---|---|---|---|---|
| GPLED | 52 | | | W | /480 |
| | **52 =** 52W<br>**78 =** 78W<br>**26 =** 26W | **Blank =** 5000K Cool<br>**N =** 4000K Neutral<br>**Y =** 3000K Warm | **Blank =** No Backbox<br>**BB =** Back Box | **Blank =** Bronze<br>**W =** White | **Blank =** No Option<br>**/D10 =** 0-10V Dimming<br>**/480 =** 480V<br>**/480/D10 =** 480V w/0-10V Dimming<br>**/BL =** Bi-Level |


Copyright © 2025 RAB Lighting All Rights Reserved Note: Specifications are subject to change at any time without notice