GPLED52W/BL



78 Watts of energy efficient LED garage lighting replaces 250 Watt Metal Halide. 100,000 hour LED lifespan. 5 year warranty. High-performance output maximizes spacing criterion.

Color: White

Weight: 17.4 lbs

Project:	**Type:**
Prepared By:	**Date:**

Driver Info

Type	Constant Current
120V	0.45A
208V	0.29A
240V	0.25A
277V	0.20A
Input Watts	53.6W

LED Info

Watts	52W
Color Temp	5100K (Cool)
Color Accuracy	71 CRI
L70 Lifespan	100,000 Hours
Lumens	5,911 lm
Efficacy	110.3 lm/W

Technical Specifications

Compliance

UL Listed:
Suitable for wet locations

IESNA LM-79 & LM-80 Testing:
RAB LED luminaires and LED components have been tested by an independent laboratory in accordance with IESNA LM-79 and LM-80.

DLC Listed:
This product is on the Design Lights Consortium (DLC) Qualified Products List and is eligible for rebates from DLC Member Utilities. Designed to meet DLC 5.1 requirements.
DLC Product Code: P78RRGT2

Performance

Lifespan:
100,000-Hour LED lifespan based on IES LM-80 results and TM-21 calculations

Wattage Equivalency:
Equivalent to 175W Metal Halide

LED Characteristics

LEDs:
4x13W high-output, long-life LEDs

Color Consistency:
7-step MacAdam Ellipse binning to achieve consistent fixture-to-fixture color

Color Stability:
LED color temperature is warrantied to shift no more than 200K in color temperature over a 5-year period

Color Uniformity:
RAB's range of Correlated Color Temperature follows the guidelines of the American National Standard for Specifications for the Chromaticity of Solid State Lighting (SSL) Products, ANSI C78.377-2017.

Construction

Cold Weather Starting:
The minimum starting temperature is -40°C (-40°F)

Maximum Ambient Temperature:
Suitable for use in up to 40°C (104°F)

Housing:
Precision die-cast aluminum housing and door frame

Lens:
Prismatic polycarbonate lens

Reflector:
Specular vacuum-metallized polycarbonate with ultra-white, 97% reflective optics

Gaskets:
High-temperature silicone

Finish:
Formulated for high durability and long-lasting color

Green Technology:
Mercury and UV free. RoHS-compliant components.

Installation

Mounting:
Pendant provided by others. Threads are 1/2 inch NPS. Stem insertion depth not to exceed 5/8 inch. Lock screw provided on fixture.

Other

Bi-Level Operation:
Allows 50% and 100% output modes

Patents:
The design of GPLED52 is protected by patents pending in US, Canada, China, Taiwan and Mexico

Warranty:
RAB warrants that our LED products will be free from defects in materials and workmanship for a period of five (5) years from the date of delivery to the end user, including coverage of light output, color stability, driver performance and fixture finish. RAB's warranty is subject to all terms and conditions found at rablighting.com/warranty.

Copyright © 2025 RAB Lighting All Rights Reserved Note: Specifications are subject to change at any time without notice

Technical Specifications (continued)

Electrical

Driver:
Driver: Constant Current, Class 2, 120V-277V, 50/60 Hz, 6kv Surge Protection, 120V: 0.45A, 208V: 0.29A, 240V: 0.25A, 277V: 0.20A

THD:
3.2% at 120V, 6.08% at 277V

Power Factor:
99.9% at 120V, 96.5% at 277V

Dimensions

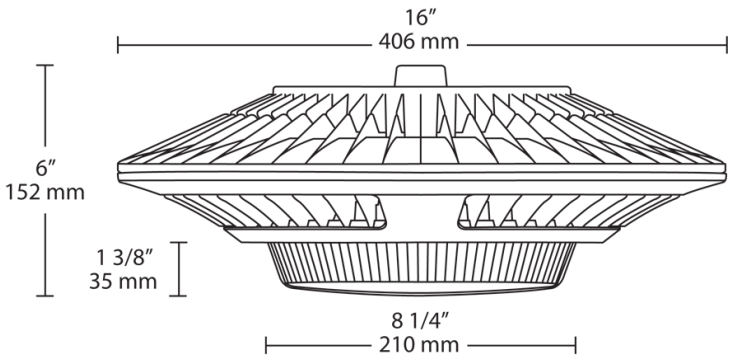

Features

- Low-profile design Ideal for Parking Garages
- 78W Replaces 250W MH Luminaires
- 100,000-hour LED lifespan based on IES LM-80 results and TM-21 calculations
- Up to 25% Reduction in Fixture Count
- Lock screw provided for pendant mount

Ordering Matrix

Family	Wattage	Color Temp	Back Box	Finish	Driver
GPLED	52			W	/BL
	52 = 52W **78 =** 78W **26 =** 26W	**Blank =** 5000K Cool **N =** 4000K Neutral **Y =** 3000K Warm	**Blank =** No Backbox **BB =** Back Box	**Blank =** Bronze **W =** White	**Blank =** No Option **/D10 =** 0-10V Dimming **/480 =** 480V **/480/D10 =** 480V w/0-10V Dimming **/BL =** Bi-Level

Copyright © 2025 RAB Lighting All Rights Reserved Note: Specifications are subject to change at any time without notice