GPLED78BB/BL



78 Watts of energy efficient LED garage lighting replaces 250 Watt Metal Halide. 100,000 hour LED lifespan. 5 year warranty. High-performance output maximizes spacing criterion.

Color: Bronze

Weight: 17.7 lbs

Project:	**Type:**
Prepared By:	**Date:**

Driver Info

Type	Constant Current
120V	0.67A
208V	0.44A
240V	0.38A
277V	0.29A
Input Watts	80.4W

LED Info

Watts	78W
Color Temp	5100K (Cool)
Color Accuracy	71 CRI
L70 Lifespan	100,000 Hours
Lumens	8,963 lm
Efficacy	111.5 lm/W

Technical Specifications

Compliance

UL Listed:
Suitable for wet locations

IESNA LM-79 & LM-80 Testing:
RAB LED luminaires and LED components have been tested by an independent laboratory in accordance with IESNA LM-79 and LM-80.

DLC Listed:
This product is on the Design Lights Consortium (DLC) Qualified Products List and is eligible for rebates from DLC Member Utilities. Designed to meet DLC 5.1 requirements.
DLC Product Code: PWPW329E

Performance

Lifespan:
100,000-Hour LED lifespan based on IES LM-80 results and TM-21 calculations

Wattage Equivalency:
Equivalent to 250W Metal Halide

LED Characteristics

LEDs:
6x13W high-output, long-life LEDs

Color Consistency:
7-step MacAdam Ellipse binning to achieve consistent fixture-to-fixture color

Color Stability:
LED color temperature is warrantied to shift no more than 200K in color temperature over a 5-year period

Color Uniformity:
RAB's range of Correlated Color Temperature follows the guidelines of the American National Standard for Specifications for the Chromaticity of Solid State Lighting (SSL) Products, ANSI C78.377-2017.

Construction

Cold Weather Starting:
The minimum starting temperature is -40°C (-40°F)

Maximum Ambient Temperature:
Suitable for use in up to 40°C (104°F)

Thermal Management:
Superior heat sinking with integrated air-flow fins

Housing:
Precision die-cast aluminum housing and door frame

Back Box:
The ceiling backbox is perfect for adding sensors or making splices to the GPLED™ family of products. Surface mounts over any shape box and covers unsightly stains or gaps. Five (1/2") conduit entries enable wiring directly from the back or through the sides using surface conduit.

Lens:
Prismatic polycarbonate lens

Reflector:
Specular vacuum-metallized polycarbonate

Gaskets:
High-temperature silicone

Finish:
Formulated for high durability and long-lasting color

Green Technology:
Mercury and UV free. RoHS-compliant components.

Installation

Mounting:
Pendant provided by others. Threads are 1/2 inch NPS. Stem insertion depth not to exceed 5/8 inch. Lock screw provided on fixture.

Copyright © 2025 RAB Lighting All Rights Reserved Note: Specifications are subject to change at any time without notice

Technical Specifications (continued)

Other

GPLED78 with Bi-Level Operation:
Allows 33%-66%-100% output modes

Patents:
The design of GPLED78 is protected by patents pending in US, Canada, China, Taiwan and Mexico

Warranty:
RAB warrants that our LED products will be free from defects in materials and workmanship for a period of five (5) years from the date of delivery to the end user, including coverage of light output, color stability, driver performance and fixture finish. RAB's warranty is subject to all terms and conditions found at rablighting.com/warranty.

Optical

BUG Rating:
B3 U3 G2

Electrical

Driver:
Driver: Constant Current, Class 2, 120V-277V, 50/60 Hz, 6kv Surge Protection, 120V: 0.67A, 208V: 0.44A, 240V: 0.38A, 277V: 0.29A

THD:
2.4% at 120V, 8.23% at 277V

Power Factor:
99.9% at 120V, 96.5% at 277V

Dimensions

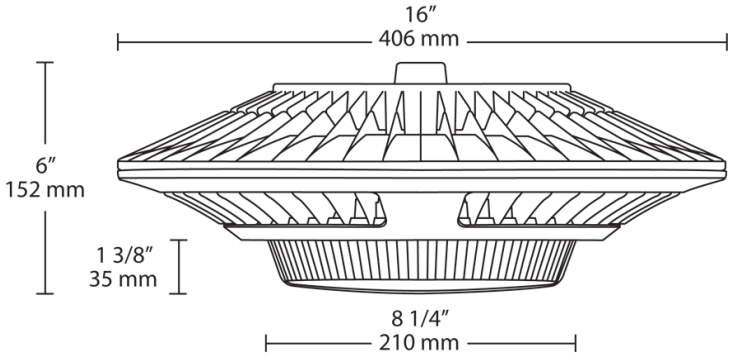

Features

- Low-profile design Ideal for Parking Garages
- 78W Replaces 250W MH Luminaires
- 100,000-hour LED lifespan based on IES LM-80 results and TM-21 calculations
- Up to 25% Reduction in Fixture Count
- Lock screw provided for pendant mount

Copyright © 2025 RAB Lighting All Rights Reserved Note: Specifications are subject to change at any time without notice

Ordering Matrix

Family	Wattage	Color Temp	Back Box	Finish	Driver
GPLED	78		BB		/BL
	52 = 52W **78 =** 78W **26 =** 26W	**Blank =** 5000K Cool **N =** 4000K Neutral **Y =** 3000K Warm	**Blank =** No Backbox **BB =** Back Box	**Blank =** Bronze **W =** White	**Blank =** No Option **/D10 =** 0-10V Dimming **/480 =** 480V **/480/D10 =** 480V w/0-10V Dimming **/BL =** Bi-Level

Copyright © 2025 RAB Lighting All Rights Reserved Note: Specifications are subject to change at any time without notice