HBLED18YA



Color: Bronze

Weight: 4.8 lbs

Project:	**Type:**
Prepared By:	**Date:**

Driver Info

Type	Constant Current
120V	0.17A
208V	0.09A
240V	0.08A
277V	0.06A
Input Watts	19.6W

LED Info

Watts	18W
Color Temp	3000K (Warm)
Color Accuracy	72 CRI
L70 Lifespan	100,000 Hours
Lumens	2,564 lm
Efficacy	130.8 lm/W

Technical Specifications

Compliance

UL Listed:
Suitable for wet locations. Suitable for ground mounting.

IESNA LM-79 & LM-80 Testing:
RAB LED luminaires and LED components have been tested by an independent laboratory in accordance with IESNA LM-79 and LM-80.

Trade Agreements Act Compliant:
This product is a product of Cambodia and a "designated country" end product that complies with the Trade Agreements Act

DLC Listed:
This product is on the Design Lights Consortium (DLC) Qualified Products List and is eligible for rebates from DLC Member Utilities. Designed to meet DLC 5.1 requirements.
DLC Product Code: P7GZ5UKE2

LED Characteristics

LEDs:
Multi-chip, high-output, long-life LEDs

Color Stability:
RAB LEDs exceed industry standards for chromatic stability

Color Uniformity:
RAB's range of Correlated Color Temperature follows the guidelines of the American National Standard for Specifications for the Chromaticity of Solid State Lighting (SSL) Products, ANSI C78.377-2017.

Construction

Cold Weather Starting:
The minimum starting temperature is -40°C (-40°F)

Thermal Management:
Superior heat sinking with external Air-Flow fins

Housing:
Precision die-cast aluminum housing, lens frame and mounting arm

Reflector:
Semi-specular, vacuum-metalized polycarbonate

Gaskets:
High-temperature silicone gaskets

Finish:
Our environmentally friendly polyester powder coatings are formulated for high-durability and long-lasting color

Green Technology:
Mercury and UV free. RoHS-compliant components.

Installation

Mounting:
Heavy-duty 1/2" thread mounting arm with "O" ring seal & stainless steel screws

\

Optical

NEMA Type:
NEMA Beam Spread 5H x 5V

Other

Warranty:
RAB warrants that our LED products will be free from defects in materials and workmanship for a period of five (5) years from the date of delivery to the end user, including coverage of light output, color stability, driver performance and fixture finish. RAB's warranty is subject to all terms and conditions found at rablighting.com/warranty.

Electrical

Driver:
Constant Current, 120-277V with 4kV surge protection, 120V: 0.17A, 208V: 0.09A, 240V: 0.08A, 277V: 0.06A

THD:
9.38% at 120V, 9.95% at 277V

Copyright © 2025 RAB Lighting All Rights Reserved Note: Specifications are subject to change at any time without notice

Technical Specifications (continued)

Power Factor:
99.1% at 120V, 91.6% at 277V

Dimensions

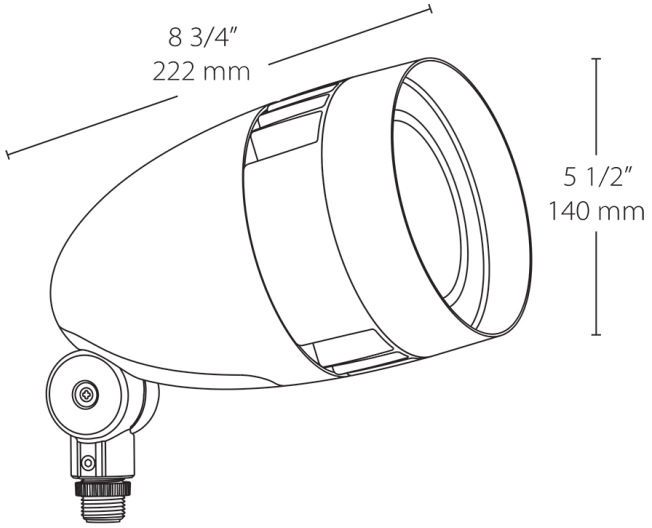

Features

- 80% energy savings vs. PAR floods
- Mount on junction box or on RAB Mighty Post
- Patent-pending "Air-Flow" technology
- NEMA type - 5H x 5V
- 5-Year, No-Compromise Warranty

Ordering Matrix

Family	Wattage	Color Temp	Finish	Driver Options
HBLED	18	Y	A	
	18 = 18W **26 =** 26W	**Blank =** 5000K Cool **N =** 4000K Neutral **Y =** 3000K Warm	**A =** Bronze **W =** White **B =** Black **VG =** Verde Green	**Blank =** No Option **/D10 =** 0-10V Dimming **/480 =** 480V - Only available for 26W

Copyright © 2025 RAB Lighting All Rights Reserved Note: Specifications are subject to change at any time without notice