LES2X13YB



Two adjustable 13W LED floodlights. Equivalent to 2x75W BR30/halogen/wide floods. Diffusion lens optimizes light output without glare.

Color: Black

Weight: 3.0 lbs

Project:	**Type:**
Prepared By:	**Date:**

Driver Info

Type	Constant Current
120V	0.20A
208V	N/A
240V	N/A
277V	N/A
Input Watts	22.2W

LED Info

Watts	26W
Color Temp	3000K (Warm)
Color Accuracy	83 CRI
L70 Lifespan	60,000 Hours
Lumens	2,538 lm
Efficacy	114.3 lm/W

Technical Specifications

Compliance

UL Listed:
Suitable for wet locations. Suitable for mounting within 4 ft of the ground.

IESNA LM-79 & LM-80 Testing:
RAB LED luminaires and LED components have been tested by an independent laboratory in accordance with IESNA LM-79 and LM-80.

DLC Listed:
This product is on the Design Lights Consortium (DLC) Qualified Products List and is eligible for rebates from DLC Member Utilities. Designed to meet DLC 5.1 requirements.
DLC Product Code: PE5SO97J

Optical

NEMA Type:
6H x 6V Beam Spread

Construction

Cold Weather Starting:
The minimum starting temperature is -40°C (-40°F)

Maximum Ambient Temperature:
Suitable for use in up to 40°C (104°F)

Housing:
Precision die-cast aluminum housing, lens frame and mounting arm

Reflector:
Vacuum-metalized polycarbonate

Lens:
Diffused glass for smooth, even light distribution

Mounting:
Pre-Assembled and wired for easy mounting EZ Hang hook. Compatible with round and rectangular surface mount boxes as well as recessed boxes.

Gaskets:
High-temperature silicone gaskets

Finish:
Our environmentally friendly polyester powder coatings are formulated for high-durability and long-lasting color

Green Technology:
Mercury and UV free. RoHS-compliant components.

Other

Note:
All values are typical (tolerance +/- 10%)

5 Yr Limited Warranty:
The RAB 5-year, limited warranty covers light output, driver performance and paint finish. RAB's warranty is subject to all terms and conditions found at rablighting.com/warranty.

Buy American Act Compliance:
RAB values USA manufacturing! Upon request, RAB may be able to manufacture this product to be compliant with the Buy American Act (BAA). Please contact customer service to request a quote for the product to be made BAA compliant.

LED Characteristics

LEDs:
Long-life, high-efficacy, surface-mount LEDs

Color Uniformity:
RAB's range of Correlated Color Temperature follows the guidelines of the American National Standard for Specifications for the Chromaticity of Solid State Lighting (SSL) Products, ANSI C78.377-2017.

Electrical

Driver:
120V driver, 50/60/ Hz, 120V: 0.20A

THD:
11.1% at 120V

Copyright © 2024 RAB Lighting All Rights Reserved Note: Specifications are subject to change at any time without notice

Technical Specifications (continued)

Power Factor:
99.1% at 120V

Dimensions

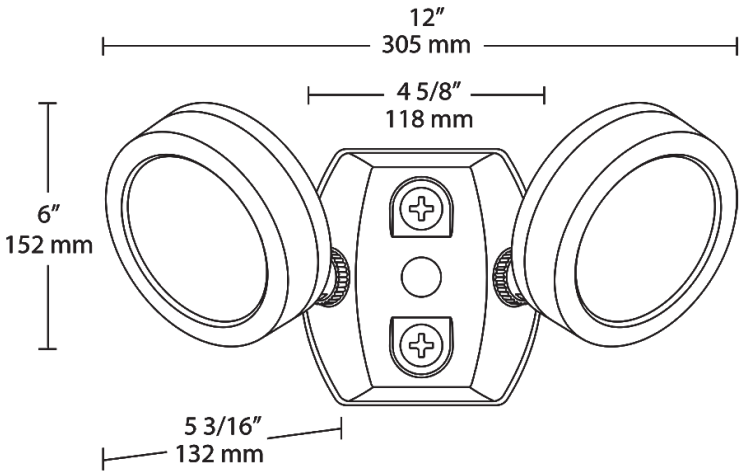

Features

- Equivalent to two 75W halogen BR30 wide floods
- 6H x 6V beam distribution delivers ample light
- Diffused lens for smooth, even light distribution
- Adjustable knuckle
- 60,000-Hour LED lifespan

Ordering Matrix

Family	Wattage	Color Temp	Finish
LES	2X13	Y	B
	2X13 = 2 x 13W	**Blank =** 5000K Cool **N =** 4000K Neutral **Y =** 3000K Warm	**Blank =** Bronze **W =** White **B =** Black [1] **VG =** Verde Green [1]

[1] *Not available with sensor.*

Copyright © 2024 RAB Lighting All Rights Reserved Note: Specifications are subject to change at any time without notice