# PLED26N



LED pendant mounted fixture with precision optics for smooth and uniform distribution. Ideal for retail settings, workspace lighting and other applications requiring a high output commercial grade downlight.

Color: Bronze

Weight: 18.0 lbs

| | |
|---|---|
| **Project:** | **Type:** |
| **Prepared By:** | **Date:** |

### Driver Info

| | |
|---|---|
| Type | Constant Current |
| 120V | 0.30A |
| 208V | 0.17A |
| 240V | 0.15A |
| 277V | 0.13A |
| Input Watts | 28.8W |

### LED Info

| | |
|---|---|
| Watts | 26W |
| Color Temp | 4000K (Neutral) |
| Color Accuracy | 72 CRI |
| L70 Lifespan | 100,000 Hours |
| Lumens | 2,495 lm |
| Efficacy | 86.6 lm/W |

## Technical Specifications

### Compliance

**UL Listed:**
Suitable for wet locations

**IESNA LM-79 & LM-80 Testing:**
RAB LED luminaires and LED components have been tested by an independent laboratory in accordance with IESNA LM-79 and LM-80.

### Performance

**Lifespan:**
100,000-Hour LED lifespan based on IES LM-80 results and TM-21 calculations

### LED Characteristics

**LEDs:**
High-output, long-life LEDs

**Color Consistency:**
3-step MacAdam Ellipse binning to achieve consistent fixture-to-fixture color

**Color Stability:**
LED color temperature is warrantied to shift no more than 200K in color temperature over a 5-year period

**Color Uniformity:**
RAB's range of Correlated Color Temperature follows the guidelines of the American National Standard for Specifications for the Chromaticity of Solid State Lighting (SSL) Products, ANSI C78.377-2017.

### Construction

**Cold Weather Starting:**
The minimum starting temperature is -40°C (-40°F)

**Thermal Management:**
Optimized using computational fluid dynamics software to ensure long LED and driver lifespan

**Housing:**
Precision die-cast aluminum housing, lens frame

**Lens:**
Clear tempered glass lens

**Gaskets:**
High-temperature silicone

**Finish:**
Formulated for high durability and long-lasting color

**Green Technology:**
Mercury and UV free. RoHS-compliant components.

### Other

**Patents:**
The design of PLED26 is protected by patents pending in US, Canada, China, Taiwan and Mexico

**Warranty:**
RAB warrants that our LED products will be free from defects in materials and workmanship for a period of five (5) years from the date of delivery to the end user, including coverage of light output, color stability, driver performance and fixture finish. RAB's warranty is subject to all terms and conditions found at rablighting.com/warranty.

**Buy American Act Compliance:**
RAB values USA manufacturing! Upon request, RAB may be able to manufacture this product to be compliant with the Buy American Act (BAA). Please contact customer service to request a quote for the product to be made BAA compliant.

### Optical

**BUG Rating:**
B1 U1 G0

### Electrical

**Driver:**
Driver, Constant Current, Class 2, 100V-277V, 50/60 Hz, 6kv Surge Protection, 720mA, 100-277VAC 0.4 Amps., Power Factor 99%.


Copyright © 2024 RAB Lighting All Rights Reserved Note: Specifications are subject to change at any time without notice

## Technical Specifications (continued)

**THD:**
14.7% at 120V

## Dimensions

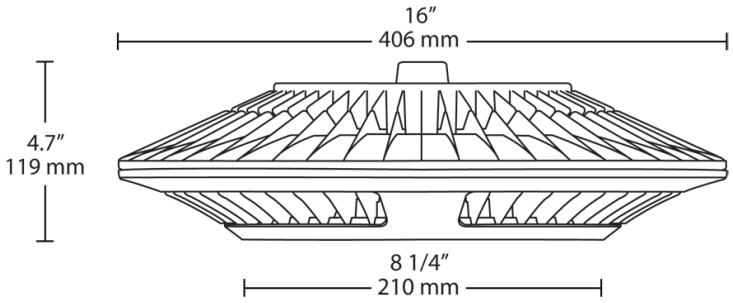


## Features

- Precision optics deliver uniform light distribution
- 100,000-hour LED lifespan
- 5-Year, No-Compromise Warranty


Copyright © 2024 RAB Lighting All Rights Reserved Note: Specifications are subject to change at any time without notice