PLED™ INSTALLATION INSTRUCTIONS

Thank you for buying RAB lighting fixtures. Our goal is to design the best quality products to get the job done right. We'd like to hear your comments. Call the Marketing Department at 888-RAB-1000 or email: marketing@rabweb.com



PLED2X10
PLED2X13



PLED2X20
PLED2X26



PLED2X10/UP
PLED2X13/UP



PLED2X20/UP
PLED2X26/UP

IMPORTANT

READ CAREFULLY BEFORE INSTALLING FIXTURE. RETAIN THESE INSTRUCTIONS FOR FUTURE REFERENCE.
RAB fixtures must be wired in accordance with the National Electrical Code and all applicable local codes. Proper grounding is required for safety. THIS PRODUCT MUST BE INSTALLED IN ACCORDANCE WITH THE APPLICABLE INSTALLATION CODE BY A PERSON FAMILIAR WITH THE CONSTRUCTION AND OPERATION OF THE PRODUCT AND THE HAZARDS INVOLVED.
WARNING: Make certain power is OFF before installing or maintaining fixture.
No user servicable parts inside.

PLED2X10, PLED2X13

Choose pendant length and mount the PLED to a junction box as follows:

1. Assemble **Pendant Stems** for desired length. One each of 6", 12" and 18" are provided for a maximum length of 36".
2. Feed wires through **Pendant Stems.** Fixtures are provided with 42" of wire.
3. For wet locations wrap threads on **Pendant Stems** with teflon tape. Assemble to fixture and tighten **Locknut**.
4. Assemble **Pendant Tubes**, **Hang Straight** and **Canopy** with the **Bolt** provided feeding the wires up through the center hole in the **Bolt**. Be sure to use the external tooth **Lock Washer** between the **Bolt** and **Canopy**.
5. Mount the **Adaptor Plate** to **Junction Box** (not supplied) with hardware provided.
6. Attach **Tether** to fixture and **Adaptor Plate** with the screw provided**.**
7. Wire fixture as shown in the wiring section. Do not use PLED2X10 on 277V circuit.
8. Align the **Canopy** on fixture to **Adaptor Plate** and tighten (2) **Side Screws** through the **Canopy** to the **Adaptor Plate.**
9. Tighten **Hang Straight Screw.**

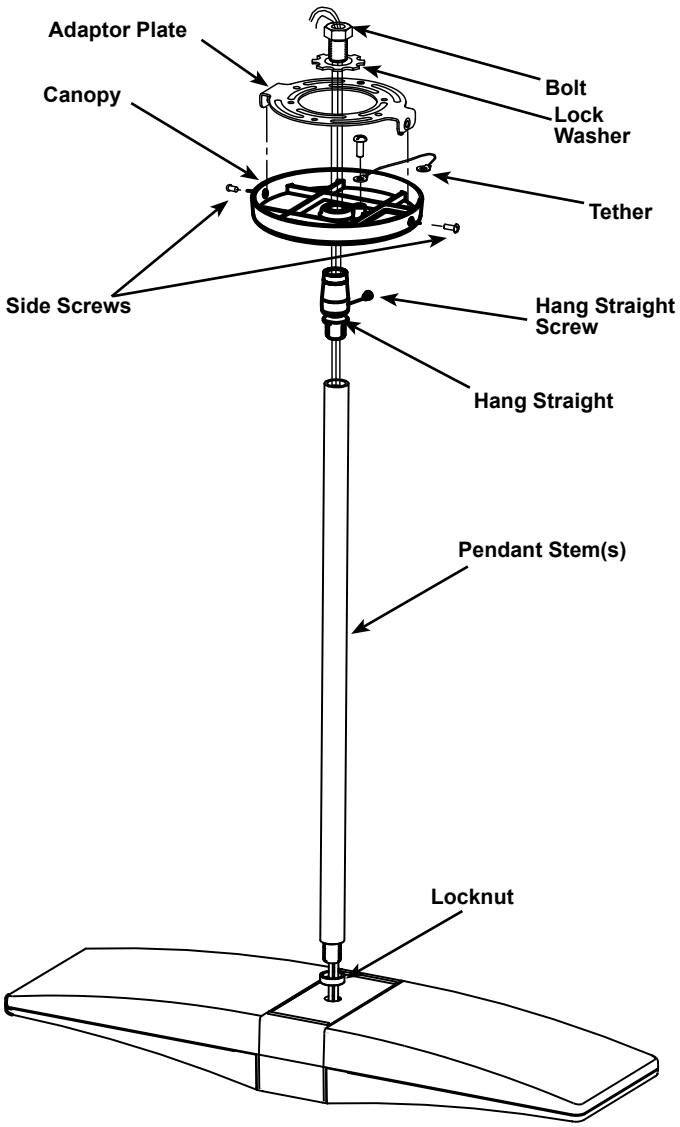

PLED™ INSTALLATION INSTRUCTIONS

Thank you for buying RAB lighting fixtures. Our goal is to design the best quality products to get the job done right. We'd like to hear your comments. Call the Marketing Department at 888-RAB-1000 or email: marketing@rabweb.com

PLED2X20, PLED2X26

Choose pendant length and mount the PLED to a junction box as follows:

1. Assemble **Pendant Stems** for desired length. One each of 6", 12" and 18" are provided for a maximum length of 36".
2. Feed wires through **Pendant Stems.** Fixtures are provided with 42" of wire.
3. For wet locations wrap threads on **Pendant Stems** with teflon tape. Assemble to fixture and tighten **Locknut**.
4. Assemble **Pendant Tubes**, **Hang Straight** and **Canopy** with the **Bolt** provided feeding the wires up through the center hole in the **Bolt**. Be sure to use the external tooth **Lock Washer** between the **Bolt** and **Canopy**.
5. Mount the **Adaptor Plate** to **Junction Box** (not supplied) with hardware provided.
6. Attach **Tether** to fixture and **Adaptor Plate** with the screw provided**.**
7. Align the **Canopy** on fixture to **Adaptor Plate** and tighten (2) **Side Screws** through the **Canopy** to the **Adaptor Plate.**
8. Tighten **Hang Straight Screw.**

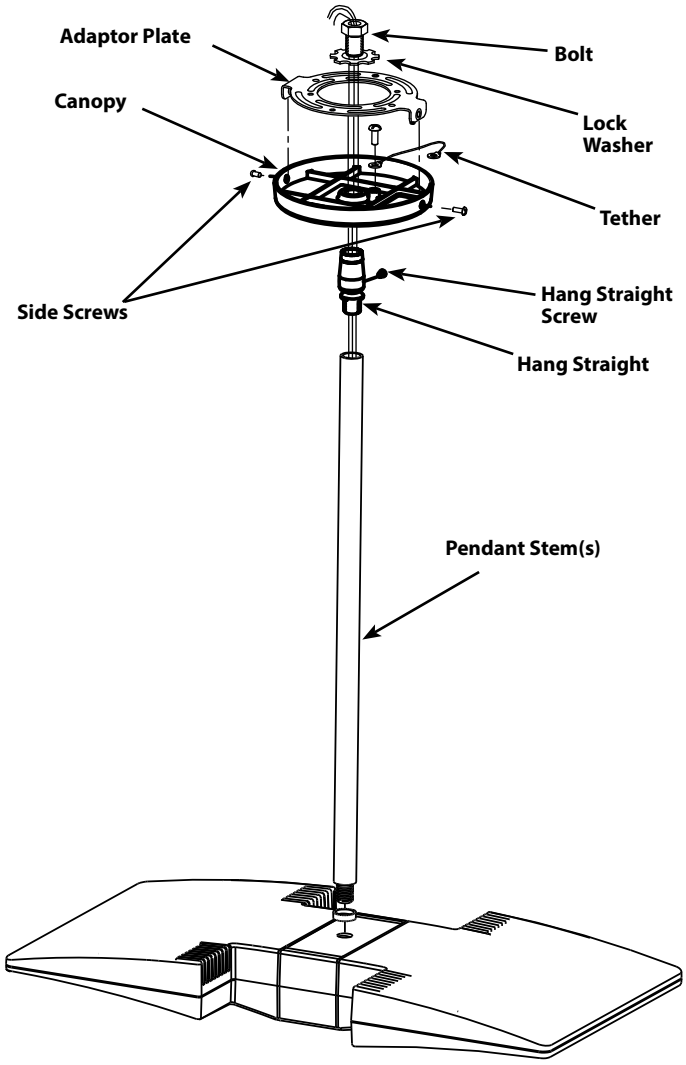

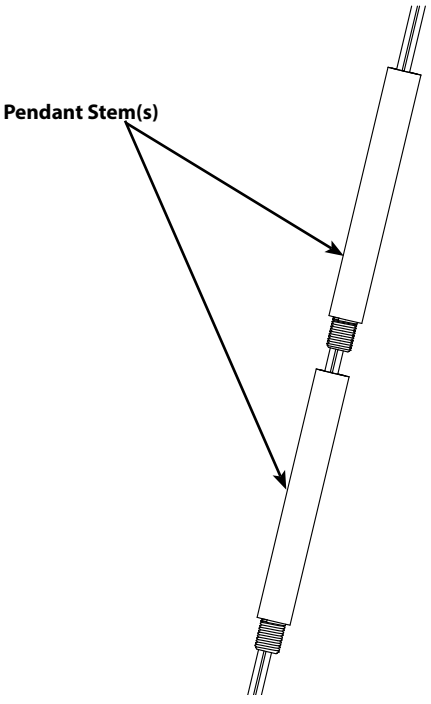

PLED™ INSTALLATION INSTRUCTIONS

Thank you for buying RAB lighting fixtures. Our goal is to design the best quality products to get the job done right. We'd like to hear your comments. Call the Marketing Department at 888-RAB-1000 or email: marketing@rabweb.com

PLED UPLIGHT

Choose pendant length and mount the PLED to a Junction Box as described in the previous sections: If factory ordered with a "/UP" suffix, the connection housing will be assembled with the **Threaded Hole** as shown below.

CAUTION: PLED2x10 & PLED2x13 are Suitable for Damp Locations only in the uplight orientation.

The PLED2x20 & PLED2X26 are Suitable for Wet Locations in the uplight orientation.

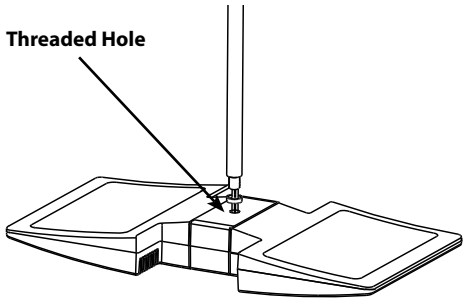

CLEANING & MAINTENANCE

CAUTION: Be sure fixture temperature is cool enough to touch. Do not clean or maintain while fixture is energized.

1. Clean glass lens with non-abrasive glass cleaning solution.
2. Do not open fixture to clean the LED. Do not touch the LED.
3. For optimal performance keep fixture fins clear of debri.

OPTIONS

Suffix "Y" = Warm 2800K to 3000K LED
Suffix "N" = Neutral 4000K LED (for 13W & 26W)
Suffix "/UP" = Factory assembled as Uplight
Suffix "/PC" = Factory Installed PhotoCell -120V

The design of the PLED is protected by U.S. patent D608,040; D615,689 and patents pending in Canada, China, Taiwan and Mexico.

Note: These instructions do not cover all details or variations in equipment nor do they provide for every possible situation during installation, operation or maintenance.

0-10V DIMMABLE WIRING

Universal voltage driver permits operation at 120V thru 277V, 50 or 60 Hz. For 0-10V Dimming, follow the wiring directions as in fig. 2.

1. For Junction Box Mount, feed wires through silicone wiring plug into the junction box.
2. Connect the black fixture lead to the (+) LINE supply lead.
3. Connect the white fixture lead to the (-) COMMON supply lead.
4. Connect the GROUND wire from fixture to supply ground. Do NOT connect the GROUND of the dimming fixture to the output.
5. Connect the purple fixture lead to the (V+) DIM lead.
6. Connect the gray fixture lead to the (V-) DIM lead.
7. Cap the yellow fixture lead, if present. Do NOT connect.

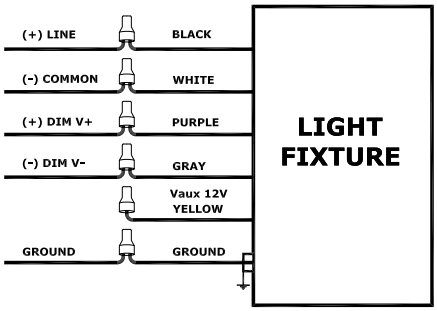

WIRING

Universal voltage driver permits operation at 50 on 60Hz and the following voltages:

PLED 2X10: 120 Volts - 240 Volts
PLED 2X13: 120 Volts - 277 Volts
PLED 2X20: 120 Volts - 277 Volts
PLED 2X26: 120 Volts - 277 Volts

1. Connect the black fixture lead to the (+) LINE supply lead.
2. Connect the white fixture lead to the (-) COMMON supply lead.
3. Connect the bare copper Ground wire from fixture to supply ground.

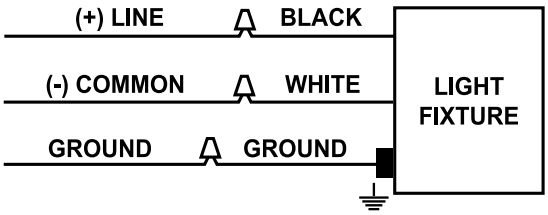

©2014 RAB LIGHTING Inc.
Northvale, New Jersey 07647 USA

PLED-IN-0614

Easy Installation & Product Help

Tech Help Line
Call our experts 888 RAB-1000

rabweb.com
Visit our website for product info

email
Answered promptly sales@rabweb.com