PLED52NW/480/D10



LED pendant mounted fixture with precision optics for smooth and uniform distribution. Ideal for retail settings, workspace lighting and other applications requiring a high output commercial grade downlight.

Color: White

Weight: 18.0 lbs

Project:	**Type:**
Prepared By:	**Date:**

Driver Info

Type	Constant Current
120V	N/A
208V	N/A
240V	N/A
277V	N/A
Input Watts	59.6W

LED Info

Watts	52W
Color Temp	4000K (Neutral)
Color Accuracy	73 CRI
L70 Lifespan	100,000 Hours
Lumens	4,553 lm
Efficacy	76.4 lm/W

Technical Specifications

Lightcloud

Lightcloud Compatibility:
This product is compatible with the Lightcloud lighting control system. Lightcloud is completely wireless and easy to install. Learn more at www.lightcloud.com

Compliance

UL Listed:
Suitable for wet locations

IESNA LM-79 & LM-80 Testing:
RAB LED luminaires and LED components have been tested by an independent laboratory in accordance with IESNA LM-79 and LM-80.

Performance

Lifespan:
100,000-Hour LED lifespan based on IES LM-80 results and TM-21 calculations

LED Characteristics

LEDs:
4x13W high-output, long-life LEDs

Color Consistency:
3-step MacAdam Ellipse binning to achieve consistent fixture-to-fixture color

Color Stability:
LED color temperature is warrantied to shift no more than 200K in color temperature over a 5-year period

Color Uniformity:
RAB's range of Correlated Color Temperature follows the guidelines of the American National Standard for Specifications for the Chromaticity of Solid State Lighting (SSL) Products, ANSI C78.377-2017.

Construction

Cold Weather Starting:
The minimum starting temperature is -40°C (-40°F)

Thermal Management:
Optimized using computational fluid dynamics software to ensure long LED and driver lifespan

Housing:
Precision die-cast aluminum housing, lens frame

Lens:
Clear tempered glass lens

Gaskets:
High-temperature silicone

Finish:
Formulated for high durability and long-lasting color

Green Technology:
Mercury and UV free. RoHS-compliant components.

Other

Patents:
The design of PLED52 is protected by patents pending in US, Canada, China, Taiwan and Mexico

Warranty:
RAB warrants that our LED products will be free from defects in materials and workmanship for a period of five (5) years from the date of delivery to the end user, including coverage of light output, color stability, driver performance and fixture finish. RAB's warranty is subject to all terms and conditions found at rablighting.com/warranty.

Buy American Act Compliance:
RAB values USA manufacturing! Upon request, RAB may be able to manufacture this product to be compliant with the Buy American Act (BAA). Please contact customer service to request a quote for the product to be made BAA compliant.

Copyright © 2024 RAB Lighting All Rights Reserved Note: Specifications are subject to change at any time without notice

Technical Specifications (continued)

Electrical

Drivers:

2x26W Driver, Constant Current, Class 2, 100V-277V, 50/60 Hz, 6kv Surge Protection, 720mA, 100-277VAC 0.4 Amps., Power Factor 99%.

Dimensions

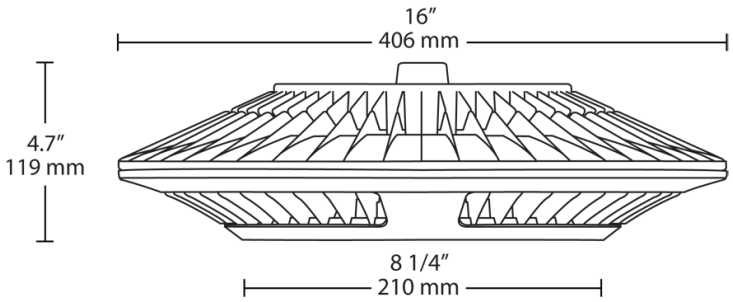

Features

- Precision optics deliver uniform light distribution
- 100,000-hour LED lifespan
- 5-Year, No-Compromise Warranty

Copyright © 2024 RAB Lighting All Rights Reserved Note: Specifications are subject to change at any time without notice