PRT30NW/480



This ultra high efficiency LED garage light delivers up to 118 lumens per Watt. Available in 30, 42 and 55 Watt versions that replace 70 to 175 Watt metal halide fixtures. Fixture measures 14" L x 14" W.

Color: White

Weight: 10.4 lbs

Project:	**Type:**
Prepared By:	**Date:**

Driver Info

Type	Constant Current
120V	0.25A
208V	0.16A
240V	0.14A
277V	0.12A
Input Watts	27.7W

LED Info

Watts	30W
Color Temp	4000K (Neutral)
Color Accuracy	77 CRI
L70 Lifespan	100,000 Hours
Lumens	3,535 lm
Efficacy	127.6 lm/W

Technical Specifications

Compliance

UL Listed:
Suitable for wet locations

IP Rating:
Ingress protection rating of IP66 for dust and water

IESNA LM-79 & LM-80 Testing:
RAB LED luminaires and LED components have been tested by an independent laboratory in accordance with IESNA LM-79 and LM-80.

DLC Listed:
This product is listed by Design Lights Consortium (DLC) as an ultra-efficient premium product that qualifies for the highest tier of rebates from DLC Member Utilities. Designed to meet DLC 5.1 requirements.
DLC Product Code: PKBV1QH8

Electrical

Drivers:
Constant Current, Class 2, 480V, 50/60 Hz. 480V: 0.12A, THD <20%.

Dimming Driver:
Driver includes dimming control wiring for 0-10V dimming systems. Requires separate 0-10V DC dimming circuit. Dims down to 10%.

THD:
6.2% at 480V

Power Factor:
90.9% at 480V

Construction

Lens:
Frosted polycarbonate

Gaskets:
High-temperature silicone

Ambient Temperature:
Suitable for use in up to 40°C (104°F)

Finish:
Formulated for high durability and long-lasting color

Cold Weather Starting:
The minimum starting temperature is -40°C (-40°F)

Thermal Management:
Superior thermal management with external "Air-Flow" fins

Housing:
Die-cast aluminum and sheetmetal housing. Polycarbonate is affected by cleaning agents or other liquids containing partial solvents such as low molecular weight aldehydes and ethers, ketones, esters, aromatic hydrocarbons and perchlorinated hydrocarbons. Click here for a detailed list of damaging chemicals.

Mounting:
Die-cast aluminum backbox with (4) 1/2" conduit openings with plugs. Hinged tether for easy installation and wiring. Also accomodates 1/2" or 3/4" NPS pendants (provided by others).

Reflector:
Specular polycarbonate

Green Technology:
Mercury and UV free. RoHS-compliant components.

LED Characteristics

LEDs:
Long-life, high-efficacy, surface-mount LEDs

Color Consistency:
7-step MacAdam Ellipse binning to achieve consistent fixture-to-fixture color

Copyright © 2024 RAB Lighting All Rights Reserved Note: Specifications are subject to change at any time without notice

Technical Specifications (continued)

Color Stability:
LED color temperature is warrantied to shift no more than 200K in color temperature over a 5-year period

Color Uniformity:
RAB's range of Correlated Color Temperature follows the guidelines of the American National Standard for Specifications for the Chromaticity of Solid State Lighting (SSL) Products, ANSI C78.377-2017.

Performance

Lifespan:
100,000-Hour LED lifespan based on IES LM-80 results and TM-21 calculations

Wattage Equivalency:
Equivalent to 100W Metal Halide

Other

Warranty:
RAB warrants that our LED products will be free from defects in materials and workmanship for a period of five (5) years from the date of delivery to the end user, including coverage of light output, color stability, driver performance and fixture finish. RAB's warranty is subject to all terms and conditions found at rablighting.com/warranty.

Buy American Act Compliance:
RAB values USA manufacturing! Upon request, RAB may be able to manufacture this product to be compliant with the Buy American Act (BAA). Please contact customer service to request a quote for the product to be made BAA compliant.

Dimensions

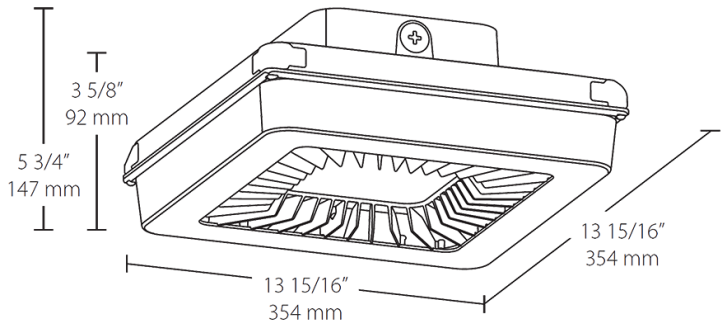

Features

- Ultra-high efficiency
- Pendant or surface mount
- Low glare, vandal-resistant polycarbonate lens
- 20% uplight eliminates "cave effect"
- 100,000-Hour LED lifespan
- 5-Year, No-Compromise Warranty

Copyright © 2024 RAB Lighting All Rights Reserved Note: Specifications are subject to change at any time without notice

Ordering Matrix

Family	Wattage	Color Temp	Finish	Driver Options	Options	Other Options
PRT	30	N	W	/480		
	42 = 42W (14" x 14") **55 =** 55W (14" x 14") **70 =** 70W (18" x 18") **80 =** 80W (18" x 18") **105 =** 105W (18" x 18") **30 =** 30W (14" x 14")	**Blank =** 5000K Cool **N =** 4000K Neutral **Y =** 3000K Warm	**Blank =** Bronze **W =** White	**/480 =** 480V, 0-10V Dimming **Blank =** 120-277V, 0-10V Dimming	**Blank =** No Option **/E =** Battery Backup **/WS =** Multi-Level Motion Sensor for 14" **/WS2 =** Multi-Level Motion Sensor for 18" **/PCS =** 120V Swivel Photocell **/PCS2 =** 277V Swivel Photocell **/PCS4 =** 480V Swivel Photocell **/LC =** Lightcloud Controller **/LCS =** Lightcloud Sensor	**USA =** BAA Compliant **Blank =** Standard

[1] *Only available for 120-277V.*

Copyright © 2024 RAB Lighting All Rights Reserved Note: Specifications are subject to change at any time without notice