VAN1LED6YW

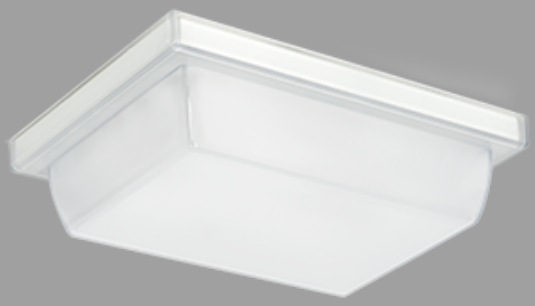

Low-profile vandalproof fixture replaces traditional incandescent luminaires delivering impressive energy savings.

Color: White

Weight: 1.6 lbs

Project:	**Type:**
Prepared By:	**Date:**

Driver Info

Type	Constant Current
120V	0.055A
208V	N/A
240V	N/A
277V	N/A
Input Watts	6.5W

LED Info

Watts	6W
Color Temp	3000K (Warm)
Color Accuracy	84 CRI
L70 Lifespan	50,000 Hours
Lumens	781 lm
Efficacy	120.2 lm/W

Technical Specifications

Compliance

UL Listed:
Suitable for Wet Locations. Covered Ceiling Mount Only.

IESNA LM-79 & LM-80 Testing:
RAB LED luminaires and LED components have been tested by an independent laboratory in accordance with IESNA LM-79 and LM-80.

DLC Listed:
This product is on the Design Lights Consortium (DLC) Qualified Products List and is eligible for rebates from DLC Member Utilities. Designed to meet DLC 5.1 requirements.
DLC Product Code: PZH7XY1J

Electrical

Driver:
AC board, 50/60 Hz., 120V: 55mA

THD:
11.4% at 120V

Power Factor:
99.3% at 120V

Dimmer Compatibility:
TRIAC/ELV dimming capable. See dimmer compatibility guide here.

Surge Protection:
2.5kV

Construction

Cold Weather Starting:
The minimum starting temperature is -30°C (-22°F)

Ambient Temperature:
Suitable for use in up to 45°C (113°F)

Housing:
Precision steel housing

Mounting:
Ceiling mount to recessed junction with knockout template. Tamperproof screws.

Lens:
Vandalproof, frosted polycarbonate drop lens

Gaskets:
High-temperature silicone gaskets

Finish:
Our environmentally friendly polyester powder coatings are formulated for high-durability and long-lasting color

Green Technology:
Mercury and UV free. RoHS-compliant components.

Performance

Lifespan:
50,000-Hour LED lifespan based on IES LM-80 results and TM-21 calculations

Wattage Equivalency:
Equivalent to 35W Metal Halide

LED Characteristics

LEDs:
120V long-lfe LEDs

Color Stability:
RAB LEDs exceed industry standards for chromatic stability

Color Uniformity:
RAB's range of Correlated Color Temperature follows the guidelines of the American National Standard for Specifications for the Chromaticity of Solid State Lighting (SSL) Products, ANSI C78.377-2017.

Other

Optional Sensor:
VAN1LED is compatible with occupancy sensors. Click here to see all occupancy sensor accessories.

Copyright © 2024 RAB Lighting All Rights Reserved Note: Specifications are subject to change at any time without notice

Technical Specifications (continued)

Warranty:
RAB warrants that our LED products will be free from defects in materials and workmanship for a period of five (5) years from the date of delivery to the end user, including coverage of light output, color stability, driver performance and fixture finish. RAB's warranty is subject to all terms and conditions found at rablighting.com/warranty.

Buy American Act Compliance:
RAB values USA manufacturing! Upon request, RAB may be able to manufacture this product to be compliant with the Buy American Act (BAA). Please contact customer service to request a quote for the product to be made BAA compliant.

Dimensions

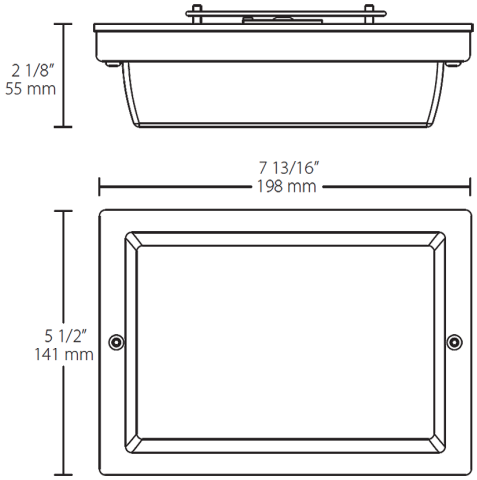

Features

- Vandalproof polycarbonate drop lens
- Ultra efficiency
- Low-profile design

Ordering Matrix

Family	Wattage	Color Temp	Finish
VAN1LED	6	Y	W
	6 = 6W **12 =** 12W	**Blank =** 5000K Cool **N =** 4000K Neutral **Y =** 3000K Warm	**W =** White

Copyright © 2024 RAB Lighting All Rights Reserved Note: Specifications are subject to change at any time without notice