VAN1LED INSTALLATION INSTRUCTIONS

Thank you for buying RAB lighting fixtures. Our goal is to design the best quality products to get the job done right. We'd like to hear your comments. Call the Marketing Department at 888-RAB-1000 or email: marketing@rabweb.com

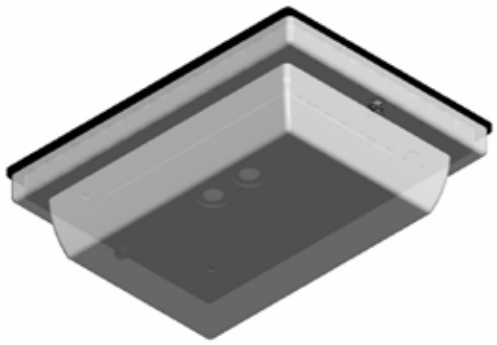

IMPORTANT

READ CAREFULLY BEFORE INSTALLING FIXTURE. RETAIN THESE INSTRUCTIONS FOR FUTURE REFERENCE.

Fixtures must be wired in accordance with the National Electrical Code and all applicable local codes. Proper grounding is required for safety. Vandalproof fixtures are for indoor or outdoor use and should not be used in areas with limited ventilation or high ambient temperatures. THIS PRODUCT MUST BE INSTALLED IN ACCORDANCE WITH THE APPLICABLE INSTALLATION CODE BY A PERSON FAMILIAR WITH THE CONSTRUCTION AND OPERATION OF THE PRODUCT AND THE HAZARDS INVOLVED.

WARNING: Make certain power is OFF before installing or maintaining fixture.

CAUTION: For proper weatherproof function all gaskets must be seated properly and all screws inserted and tightened firmly. Apply weatherproof silicone sealant around the edge of the Back Box, Lens and/or Junction Box. This is especially important with an uneven surface. Silicone all plugs and unused conduit entries.

LOCATION

COVERED CEILING MOUNT ONLY
SUITABLE FOR WET LOCATIONS

CEILING MOUNTING

1. Loosen **Tamperproof Screws** to remove **Refractor** from **Mounting Plate**.
2. Attach **Universal Mounting Bar** to **Junction Box** with bar screws (provided).
3. Feed **Supply Wires** through **Mounting Plate Gasket**.
4. Use "S" shaped **EZ Hang Hook** to hold **Mounting Plate** near **Junction Box** during wiring. Make appropriate wiring connections.
5. Attach ground wire(s) to **Green Ground Screw** (already in place on **Universal Mounting Bar)**.
6. Remove **EZ Hang Hook** and discard.
7. Align **Mounting Plate** with **Mounting Plate Gasket.** Secure Mounting Plate to **Junction Box** by tightening **O-Ring and 1/4-20 Bolt** into center hole in **Mounting Plate**.
8. Secure **Refractor** back onto **Mounting Plate** by tightening provided **Tamperproof Screws**.
9. **Refractor** should be tightly seated against **Mounting Plate Gasket.**

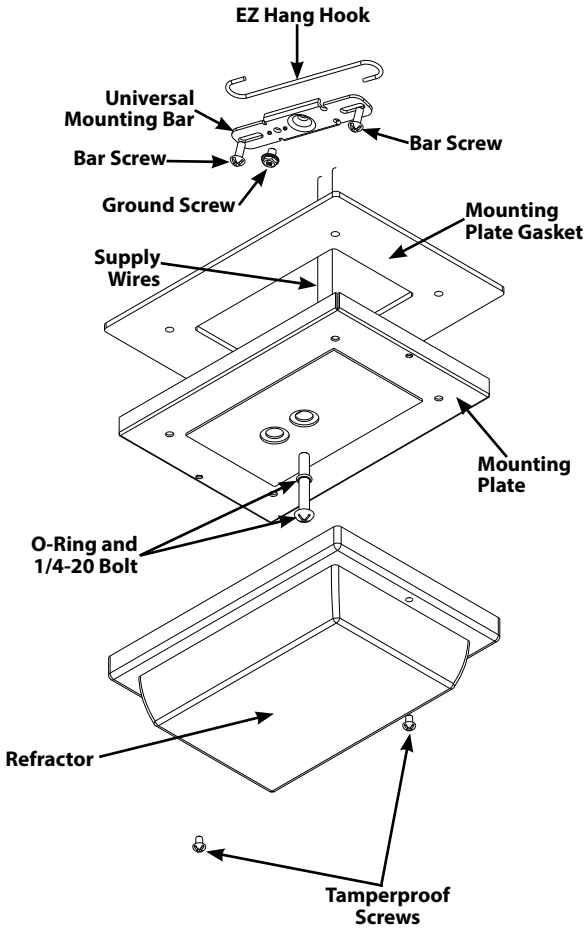

VAN1LED INSTALLATION INSTRUCTIONS

Thank you for buying RAB lighting fixtures. Our goal is to design the best quality products to get the job done right. We'd like to hear your comments. Call the Marketing Department at 888-RAB-1000 or email: marketing@rabweb.com

MOUNTING TO THE OPTIONAL VAN1BB BACK BOX

1. Attach conduit to desired conduit entrance(s) in **VAN1 BB Back Box**.
2. Loosen **Tamperproof Screws** to remove **Refractor** from **Mounting Plate**.
3. Secure **Back Box** to surface using proper hardware.
4. Feed supply lines through **Mounting Plate Gasket** and **Back Box** and make necessary wiring connections.
5. Align **Mounting Plate** with **Mounting Plate Gasket** and secure to **Back Box** by tightening **O-Ring and 1/4-20 Bolt** into offset hole in **Mounting Plate.**
6. Secure **Refractor** back onto **Mounting Plate** by tightening provided **Tamperproof Screws**.

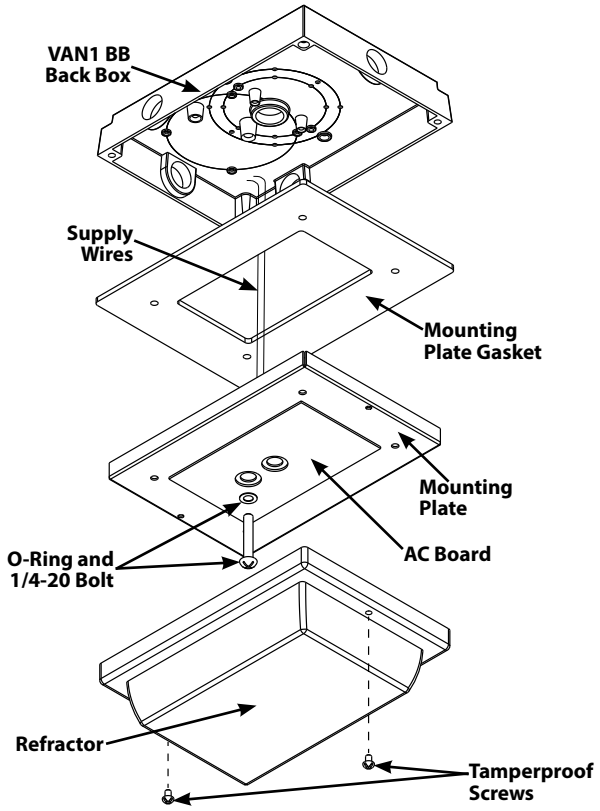

WIRING

USE SUPPLY WIRE RATED FOR 90ºC.

1. Connect the line (+) fixture lead to the black supply lead.
2. Connect the common (-) fixture lead to white supply lead.
3. Connect the GROUND wire from fixture to supply ground.
4. All unused leads must be capped and insulated.

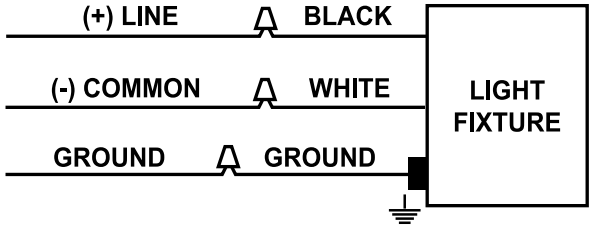

TAMPERPROOF SCREWS

RAB Vandalproof fixtures are shipped with both standard and tamperproof screws. For maximum security, insert tamperproof screws into the refractor and tighten with Center Pin Torx Screwdriver. (Catalog # Vandriver, not supplied)

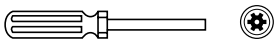

TROUBLESHOOTING

1. Check that the line voltage at the fixture is correct. Refer to wiring directions.
2. Be sure the fixture is grounded properly.

CLEANING & MAINTENANCE

CAUTION: Be sure fixture temperature is cool enough to touch. Do not clean or maintain while fixture is energized.

1. Clean polycarbonate lens with non-abrasive cleaning solution.
2. Do not open the fixture to clean the LEDs. Do not touch the LEDs.

Note: These instructions do not cover all details or variations in equipment nor do they provide for every possible situation during installation operation or maintenance.

©2016 RAB LIGHTING Inc.
Northvale, New Jersey 07647 USA

VAN1LED-IN-1016

Easy Installation & Product Help

Tech Help Line
Call our experts 888 RAB-1000

rabweb.com
Visit our website for product info

email
Answered promptly sales@rabweb.com