VANLED10FR/PCS2



Low-profile vandal-resistant fixture covers the footprint of most traditional canopy lights. Available in flat or drop lens with frosted and unfrosted options.

Color: Bronze

Weight: 11.5 lbs

Project:	**Type:**
Prepared By:	**Date:**

Driver Info

Type	Constant Current
120V	0.12A
208V	0.07A
240V	0.06A
277V	0.05A
Input Watts	14.2W

LED Info

Watts	10W
Color Temp	5000K (Cool)
Color Accuracy	84 CRI
L70 Lifespan	100,000 Hours
Lumens	1,814 lm
Efficacy	127.7

Technical Specifications

Compliance

UL Listed:
Suitable for Wet Locations. Covered Ceiling Mount Only.

IESNA LM-79 & LM-80 Testing:
RAB LED luminaires and LED components have been tested by an independent laboratory in accordance with IESNA LM-79 and LM-80.

IP Rating:
Ingress protection rating of IP66 for dust and water

DLC Listed:
This product is listed by Design Lights Consortium (DLC) as an ultra-efficient premium product that qualifies for the highest tier of rebates from DLC Member Utilities. Designed to meet DLC 5.1 requirements.
DLC Product Code: POYZK8X9 (DLC Premium: Stairwell and Passageway Luminaires)
DLC Product Code: S-GLX7ED (DLC Standard: Canopy Lighting)

Electrical

Driver:
Class 2, Constant Current, 120-277V, 50-60Hz, 120V: 0.12A, 208V: 0.07A, 240V: 0.06A, 277V: 0.05A

Dimming Driver:
Driver includes dimming control wiring for 0-10V dimming systems. Requires separate 0-10V DC dimming circuit. Dims down to 10%.

THD:
16.21% at 120V, 12.35% at 277V

Power Factor:
96.8% at 120V, 93.3% at 277V

Photocell:
277V Swivel photocell included. Photocell is compatible with 208V-277V.

LED Characteristics

LEDs:
Long-life, high-efficacy, surface-mount LEDs

Color Stability:
RAB LEDs exceed industry standards for chromatic stability

Color Uniformity:
RAB's range of Correlated Color Temperature follows the guidelines of the American National Standard for Specifications for the Chromaticity of Solid State Lighting (SSL) Products, ANSI C78.377-2017.

Construction

Maximum Ambient Temperature:
Suitable for use in up to 40°C (104°F)

Cold Weather Starting:
The minimum starting temperature is -40°C (-40°F)

Lens:
Vandal-resistant polycarbonate textured opaque for low glare frosted drop lens

Housing:
Die-cast aluminum housing and lens frame with (4) 1/2" NPS side conduit entries and weatherproof rear wire plug and access plate

Mounting:
Ceiling mount to recessed junction with knockout template or directy to ceiling surface, utilizing side conduit entry points

Air Tight:
Housing certified Air Tight as per ASTM E283

Finish:
Our environmentally friendly polyester powder coatings are formulated for high-durability and long-lasting color

Copyright © 2024 RAB Lighting All Rights Reserved Note: Specifications are subject to change at any time without notice

Technical Specifications (continued)

Other

Warranty:
RAB warrants that our LED products will be free from defects in materials and workmanship for a period of five (5) years from the date of delivery to the end user, including coverage of light output, color stability, driver performance and fixture finish. RAB's warranty is subject to all terms and conditions found at rablighting.com/warranty.

Buy American Act Compliance:
RAB values USA manufacturing! Upon request, RAB may be able to manufacture this product to be compliant with the Buy American Act (BAA). Please contact customer service to request a quote for the product to be made BAA compliant.

Performance

Wattage Equivalency:
Equivalent to 70W Metal Halide

Dimensions

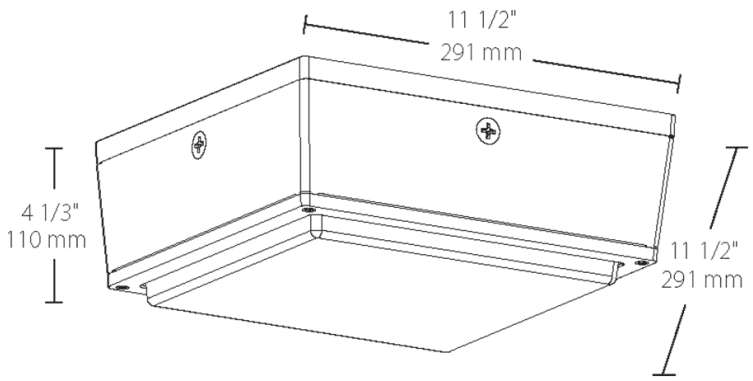

Features

- Fits the footprint of older canopy lights
- Vandal resistant and UV resistant lens
- Ultra-high efficiency
- Clean, contemporary, low-profile design
- Available with drop lens or flat lens
- IP66 rated, keeps dust, bugs and water out
- Photo and motion sensor options available

Copyright © 2024 RAB Lighting All Rights Reserved Note: Specifications are subject to change at any time without notice

Ordering Matrix

Family	Wattage	Color Temp	Lens-Optics	Finish	Voltage	Options
VANLED	10		FR			/PCS2
	20 = 20W **28 =** 28W **40 =** 40W **52 =** 52W **65 =** 65W **75 =** 75W **10 =** 10W	**Blank =** 5000K Cool **N =** 4000K Neutral **Y =** 3000K Warm	**FFR =** Frosted Flat Lens [1] **FR =** Frosted Drop Lens **F =** Flat lens [1] **Blank =** Drop lens	**Blank =** Bronze **W =** White	**Blank =** 120-277V, 0-10V Dimming **/480 =** 480V, 0-10V Dimming	**Blank =** No Options **/E2 =** Battery Backup, 120-277V only **/LC =** Lightcloud Controller **/PCS =** 120V Swivel Photocell **/PCS2 =** 277V Swivel Photocell **/PCS4 =** 480V Swivel Photocell **/WS =** Wattstopper, 8ft **/WS2 =** Wattstopper, 20ft **/MVS =** Microwave Motion Sensor [1]

[1] */MVS option not available with F and FFR lens*

Copyright © 2024 RAB Lighting All Rights Reserved Note: Specifications are subject to change at any time without notice