# VANLED52FW/480

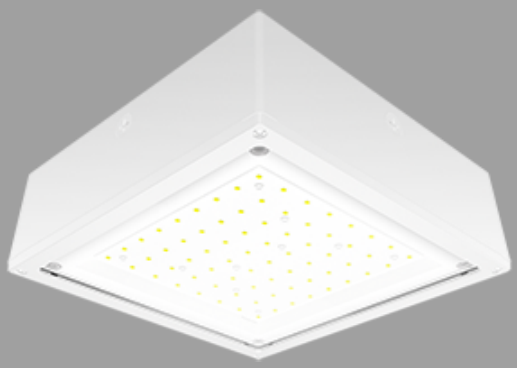

Low-profile vandal-resistant fixture covers the footprint of most traditional canopy lights. Available in flat or drop lens with frosted and unfrosted options.

Color: White

Weight: 11.5 lbs

| | |
|---|---|
| **Project:** | **Type:** |
| **Prepared By:** | **Date:** |

### Driver Info

| | |
|---|---|
| Type | Constant Current |
| 120V | N/A |
| 208V | N/A |
| 240V | N/A |
| 277V | N/A |
| Input Watts | 49.6W |

### LED Info

| | |
|---|---|
| Watts | 52W |
| Color Temp | 5000K (Cool) |
| Color Accuracy | 84 CRI |
| L70 Lifespan | 100,000 Hours |
| Lumens | 7,529 lm |
| Efficacy | 151.8 |

## Technical Specifications

### Compliance

**UL Listed:**
Suitable for Wet Locations. Covered Ceiling Mount Only.

**IESNA LM-79 & LM-80 Testing:**
RAB LED luminaires and LED components have been tested by an independent laboratory in accordance with IESNA LM-79 and LM-80.

**IP Rating:**
Ingress protection rating of IP66 for dust and water

**DLC Listed:**
This product is listed by Design Lights Consortium (DLC) as an ultra-efficient premium product that qualifies for the highest tier of rebates from DLC Member Utilities. Designed to meet DLC 5.1 requirements.
DLC Product Code: PIR27X60 (DLC Premium: Stairwell and Passageway Luminaires)
DLC Product Code: S-VSXYUO (DLC Standard: Canopy Lighting)

### Electrical

**Driver:**
Class P, Class 2, Constant Current, 480V, 50-60Hz, 480V: 0.11A

**Dimming Driver:**
Driver includes dimming control wiring for 0-10V dimming systems. Requires separate 0-10V DC dimming circuit. Dims down to 10%.

**THD:**
10.46% at 480V

**Power Factor:**
97.91% at 480V

### LED Characteristics

**LEDs:**
Long-life, high-efficacy, surface-mount LEDs

**Color Stability:**
RAB LEDs exceed industry standards for chromatic stability

**Color Uniformity:**
RAB's range of Correlated Color Temperature follows the guidelines of the American National Standard for Specifications for the Chromaticity of Solid State Lighting (SSL) Products, ANSI C78.377-2017.

### Construction

**Maximum Ambient Temperature:**
Suitable for use in up to 40°C (104°F)

**Cold Weather Starting:**
The minimum starting temperature is -40°C (-40°F)

**Lens:**
Vandal-resistant polycarbonate textured opaque for low glare flat lens

**Housing:**
Die-cast aluminum housing and lens frame with (4) 1/2" NPS side conduit entries and weatherproof rear wire plug and access plate

**Mounting:**
Ceiling mount to recessed junction with knockout template or directy to ceiling surface, utilizing side conduit entry points

**Air Tight:**
Housing certified Air Tight as per ASTM E283

**Finish:**
Our environmentally friendly polyester powder coatings are formulated for high-durability and long-lasting color


Copyright © 2024 RAB Lighting All Rights Reserved Note: Specifications are subject to change at any time without notice

## Technical Specifications (continued)

### Other

**Warranty:**
RAB warrants that our LED products will be free from defects in materials and workmanship for a period of five (5) years from the date of delivery to the end user, including coverage of light output, color stability, driver performance and fixture finish. RAB's warranty is subject to all terms and conditions found at rablighting.com/warranty.

**Buy American Act Compliance:**
RAB values USA manufacturing! Upon request, RAB may be able to manufacture this product to be compliant with the Buy American Act (BAA). Please contact customer service to request a quote for the product to be made BAA compliant.

### Performance

**Wattage Equivalency:**
Equivalent to 150W Metal Halide

### Dimensions

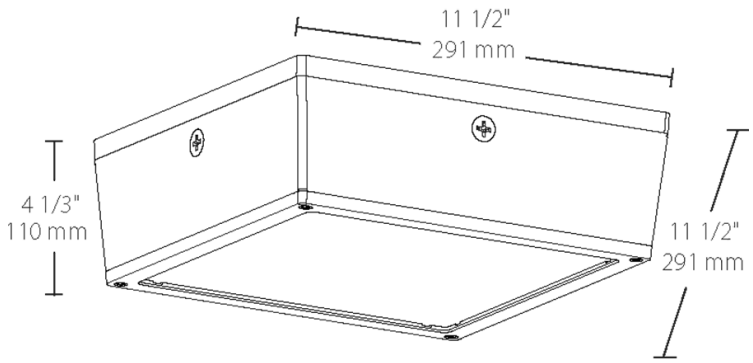


### Features

- Fits the footprint of older canopy lights
- Vandal resistant and UV resistant lens
- Ultra-high efficiency
- Clean, contemporary, low-profile design
- Available with drop lens or flat lens
- IP66 rated, keeps dust, bugs and water out
- Photo and motion sensor options available


Copyright © 2024 RAB Lighting All Rights Reserved Note: Specifications are subject to change at any time without notice

# VANLED52FW/480

## Ordering Matrix

| Family | Wattage | Color Temp | Lens-Optics | Finish | Voltage | Options |
|---|---|---|---|---|---|---|
| VANLED | 52 | | F | W | /480 | |
| | **20 =** 20W<br>**28 =** 28W<br>**40 =** 40W<br>**52 =** 52W<br>**65 =** 65W<br>**75 =** 75W<br>**10 =** 10W | **Blank =** 5000K Cool<br>**N =** 4000K Neutral<br>**Y =** 3000K Warm | **FFR =** Frosted Flat Lens [1]<br>**FR =** Frosted Drop Lens<br>**F =** Flat lens [1]<br>**Blank =** Drop lens | **Blank =** Bronze<br>**W =** White | **Blank =** 120-277V, 0-10V Dimming<br>**/480 =** 480V, 0-10V Dimming | **Blank =** No Options<br>**/E2 =** Battery Backup, 120-277V only<br>**/LC =** Lightcloud Controller<br>**/PCS =** 120V Swivel Photocell<br>**/PCS2 =** 277V Swivel Photocell<br>**/PCS4 =** 480V Swivel Photocell<br>**/WS =** Wattstopper, 8ft<br>**/WS2 =** Wattstopper, 20ft<br>**/MVS =** Microwave Motion Sensor [1] |

[1] */MVS option not available with F and FFR lens*


Copyright © 2024 RAB Lighting All Rights Reserved Note: Specifications are subject to change at any time without notice