VXBRLED26/PCS2



Partial LED Vaporproof fixture requires RAB Globe and Guard. Can be used with color globes.

Color: Natural

Weight: 3.7 lbs

Project:	**Type:**
Prepared By:	**Date:**

Driver Info

Type	Constant Current
120V	N/A
208V	0.14A
240V	0.13A
277V	0.11A
Input Watts	27.1W

LED Info

Watts	26W
Color Temp	4900K (Cool)
Color Accuracy	68 CRI
L70 Lifespan	100,000 Hours
Lumens	2,004 lm
Efficacy	73.9 lm/W

Technical Specifications

Electrical

Driver:
Constant Current, 100V-277V, 50/60 Hz, 0.48 Amp, Power Factor 97.9%.

Photocell:
277V Swivel photocell included. Photocell is compatible with 208V-277V

Performance

Lifespan:
100,000-Hour LED lifespan based on IES LM-80 results and TM-21 calculations

Construction

Specification:
These specifications are for fixture with Frosted Glass Globe and Die Cast Guard combination. Consult warehouse for different fixture combinations.

Globes and Guards:
Vaporproof LEDs are compatible with RAB Globes and Guards

Cold Weather Starting:
The minimum starting temperature is -40°C (-40°F)

Ambient Temperature:
Suitable for use in up to 40°C (104°F)

Thermal Management (Patent Pending):
Die-cast LED housing designed for maximum heat dissipation

Housing:
All die-cast aluminum construction

Gaskets:
High-temperature silicone

Finish:
Natural shot blasted aluminum

Mounting:
(3) 1/2" NPS conduit entry points

Green Technology:
Mercury and UV free. RoHS-compliant components.

Compliance

UL Listed:
Suitable for Wet locations only with outer globe and as a Downlight

IESNA LM-79 & LM-80 Testing:
RAB LED luminaires and LED components have been tested by an independent laboratory in accordance with IESNA LM-79 and LM-80.

LED Characteristics

LED:
Multi-chip 26W high-output, long-life LED

Color Consistency:
3-step MacAdam Ellipse binning to achieve consistent fixture-to-fixture color

Color Stability:
LED color temperature is warrantied to shift no more than 200K in color temperature over a 5-year period

Color Uniformity:
RAB's range of Correlated Color Temperature follows the guidelines of the American National Standard for Specifications for the Chromaticity of Solid State Lighting (SSL) Products, ANSI C38.377-2011.

Other

Patents:
The design of the LVAPOR is protected by the following patents US pat. pending; D651738 CN ZL201230040341.3; ZL201130028360.X, TW pat. 101301367 MX 35699; pat. pending CA.

Copyright © 2024 RAB Lighting All Rights Reserved Note: Specifications are subject to change at any time without notice

Technical Specifications (continued)

Warranty:
RAB warrants that our LED products will be free from defects in materials and workmanship for a period of five (5) years from the date of delivery to the end user, including coverage of light output, color stability, driver performance and fixture finish. RAB's warranty is subject to all terms and conditions found at rablighting.com/warranty.

Buy American Act Compliance:
RAB values USA manufacturing! Upon request, RAB may be able to manufacture this product to be compliant with the Buy American Act (BAA). Please contact customer service to request a quote for the product to be made BAA compliant.

Dimensions

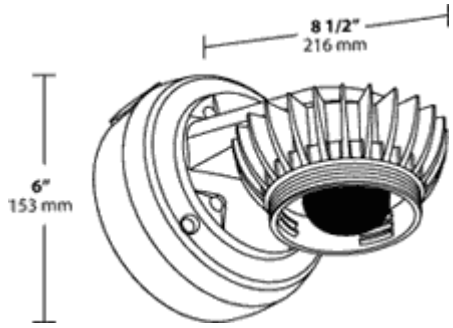

Features

- High performance LED light engine
- 100,000-hour life based on LM-80 results and TM-21 calculations
- Die Cast Aluminum Housing
- Classic design with state of the art LED technology

Copyright © 2024 RAB Lighting All Rights Reserved Note: Specifications are subject to change at any time without notice