INSTRUCTIONS

VXBRLED® w/GLOBE & GUARD INSTALLATION

RAB Lighting is committed to creating high-quality, affordable, well-designed and energy-efficient LED lighting and controls that make it easy for electricians to install and end users to save energy. We'd love to hear your comments. Please call the Marketing Department at 888-RAB-1000 or email: marketing@rablighting.com

VXBRLED-DG 13W & 26W



IMPORTANT

READ CAREFULLY BEFORE INSTALLING FIXTURE. RETAIN THESE INSTRUCTIONS FOR FUTURE REFERENCE.

RAB fixtures must be wired in accordance with the National Electrical Code and all applicable local codes. Proper grounding is required for safety. THIS PRODUCT MUST BE INSTALLED IN ACCORDANCE WITH THE APPLICABLE INSTALLATION CODE BY A PERSON FAMILIAR WITH THE CONSTRUCTION AND OPERATION OF THE PRODUCT AND THE HAZARDS INVOLVED.

WARNING: Make certain power is OFF before installing or maintaining fixture. No user serviceable parts inside.

CAUTION: For proper weatherproof function all gaskets must be seated properly and all screws inserted and tightened firmly. Apply weatherproof silicone sealant around the edge of the ceiling mounting box and/or junction box. This is especially important with an uneven ceiling surface. Silicone all plugs and unused conduit entries.

WALL MOUNTING

Fixture must be wall mounted. Use a recessed or surface mount junction box (not supplied) or use the **Housing** as the junction box.

Fixture cannot be mounted upside down in wet locations!

1. Loosen **Housing Screws** and open **Housing**.
2. Prepare back of **Housing** to use by knocking out necessary mounting holes.
3. Seal all gaps between ceiling and fixture with weatherproof silicone sealant.
4. Fixture may be wired through back conduit entrance or side conduit entrance for surface mounting.
5. Connect wires as shown in wiring section.
6. Close **Housing**. Tighten screws and check **Housing Gasket** seal.
7. Seal all holes, plugs, and conduit entrances with weatherproof silicone sealant.

Fig: 1

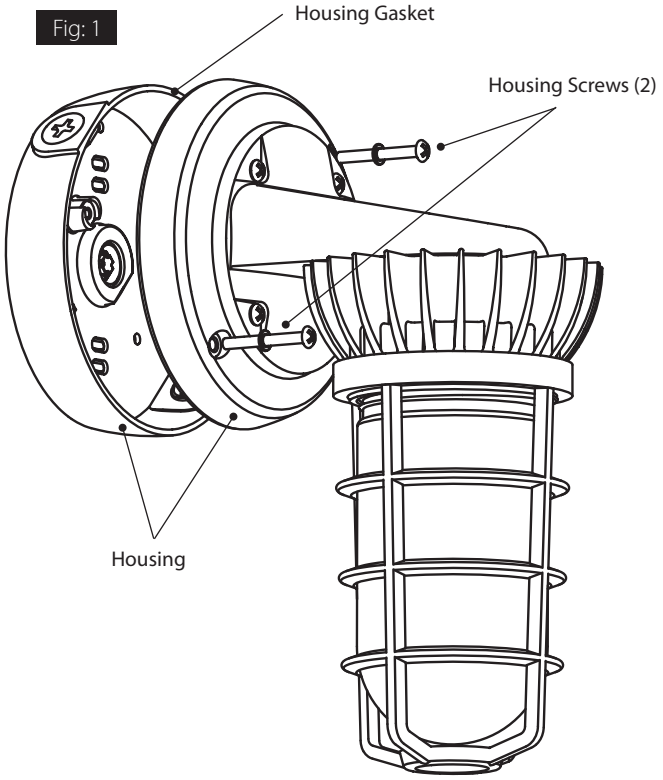

INSTRUCTIONS
VXBRLED® w/GLOBE & GUARD INSTALLATION

RAB Lighting is committed to creating high-quality, affordable, well-designed and energy-efficient LED lighting and controls that make it easy for electricians to install and end users to save energy. We'd love to hear your comments. Please call the Marketing Department at 888-RAB-1000 or email: marketing@rablighting.com

WIRING

Universal voltage driver permits operation at 120V thru 277V, 50 or 60 Hz.

1. Connect the black fixture lead to the (+) LINE supply lead.
2. Connect the white fixture lead to the (-) COMMON supply lead.
3. Connect the GROUND wire from fixture to supply ground.

Fig. 2

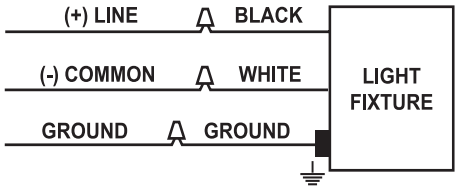

PHOTOCELL INSTALLATION

Photocell may be wired in the field. Apply weatherproof silicone sealant to all plugs and unused conduit entries.

1. Install photocell and wire as per diagram.
2. Use photocell rated for your supply voltage.

Fig. 3

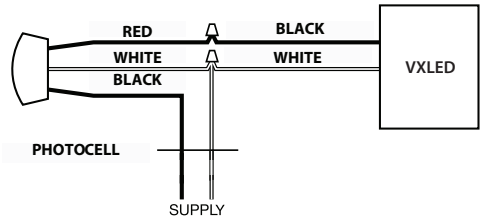

CLEANING & MAINTENANCE

CAUTION: Be sure fixture temperature is cool enough to touch. Do not clean or maintain while fixture is energized.

1. Do not open fixture to clean the LED. Do not touch the LED.
2. Clean glass lens & fixture with non-abrasive glass cleaning solution.

TROUBLESHOOTING

1. Check that the line voltage at fixture is correct.
2. Is there voltage at the lamp fixture wires? If there is no voltage, check all connections.
3. Is the fixture is grounded properly?

Note: *These instructions do not cover all details or variations in equipment nor do they provide for every possible situation during installation, operation or maintenance.*

© 2024 RAB LIGHTING Inc.

Easy Answers

rablighting.com
Visit our website for product info

Tech Help Line
Call our experts: 888 722-1000

e-mail
Answered promptly - sales@rablighting.com

Free Lighting Layouts
Answered online or by request

VXBRLED-DG-IN 0124-73307-RAB

RAB WARRANTY: *RAB's warranty is subject to all terms and conditions found at rablighting.com/warranty.*