# VXLED13Y/PCS2



Partial LED Vaporproof fixture requires RAB Globe and Guard. Can be used with color globes.

Color: Natural

Weight: 3.1 lbs

| | |
|---|---|
| **Project:** | **Type:** |
| **Prepared By:** | **Date:** |

### Driver Info

| | |
|---|---|
| Type | Constant Current |
| 120V | N/A |
| 208V | 0.08A |
| 240V | 0.07A |
| 277V | 0.06A |
| Input Watts | 15.3W |

### LED Info

| | |
|---|---|
| Watts | 13W |
| Color Temp | 3000K (Warm) |
| Color Accuracy | 86 CRI |
| L70 Lifespan | 100,000 Hours |
| Lumens | 507 lm |
| Efficacy | 33.1 lm/W |

## Technical Specifications

### Performance

**Lifespan:**
100,000-Hour LED lifespan based on IES LM-80 results and TM-21 calculations

### Electrical

**Driver:**
Multi-chip single 13W high output long life LED Driver. Constant Current,100V-277V, 50/60 Hz., 100-240VAC.3-.15 Amps 277VAC.15 Amps. Will deliver 70% of its initial lumens at 100,000 hours based onlm-80 Tests.

**Photocell:**
277V Swivel photocell included. Photocell is compatible with 208V-277V.

**Surge Protection:**
4kV

### Construction

**Specification:**
These specifications are for fixture with Frosted Glass Globe and Die Cast Guard combination. Consult warehouse for different fixture combinations.

**Globes and Guards:**
Vaporproof LEDs are compatible with RAB Globes and Guards

**Construction:**
Die cast aluminum housing and door. Tether connects back housing halves for safety.

**Thermal Management (Patent Pending):**
Die cast aluminum LED housing designed for maximum heat dissipation

**Cold Weather Starting:**
The minimum starting temperature is -40°C (-40°F)

**Ambient Temperature:**
Suitable for use in up to 35°C (95°F)

**Housing:**
Die-cast aluminum housing and driver housing

**Mounting:**
Three 1/2" NPS conduit entry points

**Reflector:**
High quality hydroformed semi-specular aluminum

**Gaskets:**
High-temperature Silicone

**Finish:**
Natural shot blasted aluminum

**Green Technology:**
Mercury and UV free. RoHS-compliant components.

### Compliance

**UL Listed:**
Suitable for Wet locations only with outer globe and as a Downlight

**IESNA LM-79 & LM-80 Testing:**
RAB LED luminaires and LED components have been tested by an independent laboratory in accordance with IESNA LM-79 and LM-80.

### LED Characteristics

**Color Consistency:**
3-step MacAdam Ellipse binning to achieve consistent fixture-to-fixture color

**Color Stability:**
LED color temperature is warrantied to shift no more than 200K in color temperature over a 5-year period

**Color Uniformity:**
RAB's range of Correlated Color Temperature follows the guidelines of the American National Standard for Specifications for the Chromaticity of Solid State Lighting (SSL) Products, ANSI C38.377-2011.


Copyright © 2024 RAB Lighting All Rights Reserved Note: Specifications are subject to change at any time without notice

## Technical Specifications (continued)

### Other

**Warranty:**
RAB warrants that our LED products will be free from defects in materials and workmanship for a period of five (5) years from the date of delivery to the end user, including coverage of light output, color stability, driver performance and fixture finish. RAB's warranty is subject to all terms and conditions found at rablighting.com/warranty.

**Patents:**
The VXLED design is protected by Taiwan Patent 01510952 and patents pending in the U.S., Canada, China and Mexico.

**Buy American Act Compliance:**
RAB values USA manufacturing! Upon request, RAB may be able to manufacture this product to be compliant with the Buy American Act (BAA). Please contact customer service to request a quote for the product to be made BAA compliant.

### Optical

**BUG Rating:**
B0 U2 G1

## Dimensions

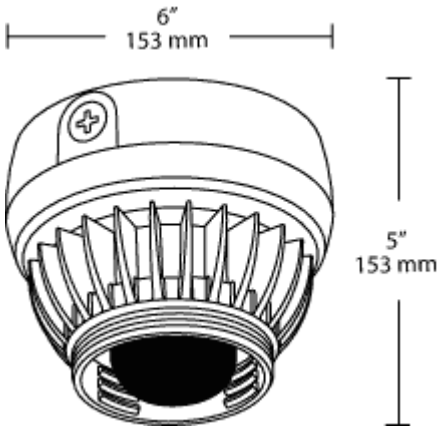


## Features

- High performance LED light engine
- 100,000-hour life based on LM-80 results and TM-21 calculations
- Die Cast Aluminum Housing
- Classic design with state of the art LED technology


Copyright © 2024 RAB Lighting All Rights Reserved Note: Specifications are subject to change at any time without notice