# VXLED26/PCS



Partial LED Vaporproof fixture requires RAB Globe and Guard. Can be used with color globes.

Color: Natural

Weight: 3.1 lbs

| | |
|---|---|
| **Project:** | **Type:** |
| **Prepared By:** | **Date:** |

### Driver Info

| | |
|---|---|
| Type | Constant Current |
| 120V | 0.25A |
| 208V | N/A |
| 240V | N/A |
| 277V | N/A |
| Input Watts | 27.1W |

### LED Info

| | |
|---|---|
| Watts | 26W |
| Color Temp | 4900K (Cool) |
| Color Accuracy | 68 CRI |
| L70 Lifespan | 100,000 Hours |
| Lumens | 2,004 lm |
| Efficacy | 73.9 lm/W |

## Technical Specifications

### Electrical

**Driver:**
Constant Current, 100V-277V, 50/60 Hz, 0.48 Amp, THD is less than or equal to 20% Power Factor 97.9%.

**Photocell:**
120V Swivel photocell included. Photocell is only compatible with 120V.

### Performance

**Lifespan:**
100,000-Hour LED lifespan based on IES LM-80 results and TM-21 calculations

### Construction

**Specification:**
These specifications are for fixture with Frosted Glass Globe and Die Cast Guard combination. Consult warehouse for different fixture combinations.

**Globes and Guards:**
Vaporproof LEDs are compatible with RAB Globes and Guards

**Cold Weather Starting:**
The minimum starting temperature is -40°C (-40°F)

**Ambient Temperature:**
Suitable for use in up to 40°C (104°F)

**Thermal Management (Patent Pending):**
Die-cast LED housing designed for maximum heat dissipation

**Housing:**
All die-cast aluminum construction

**Gaskets:**
High-temperature silicone

**Finish:**
Natural shot blasted aluminum

**Mounting:**
(3) 1/2" NPS conduit entry points

**Green Technology:**
Mercury and UV free. RoHS-compliant components.

### Compliance

**UL Listed:**
Suitable for Wet locations only with outer globe and as a Downlight

**IESNA LM-79 & LM-80 Testing:**
RAB LED luminaires and LED components have been tested by an independent laboratory in accordance with IESNA LM-79 and LM-80.

### LED Characteristics

**LED:**
Multi-chip 26W high-output, long-life LED

**Color Temperature:**
4900K

**Color Consistency:**
7-step MacAdam Ellipse binning to achieve consistent fixture-to-fixture color

**Color Stability:**
LED color temperature is warrantied to shift no more than 200K in color temperature over a 5-year period

**Color Uniformity:**
RAB's range of Correlated Color Temperature follows the guidelines of the American National Standard for Specifications for the Chromaticity of Solid State Lighting (SSL) Products, ANSI C38.377-2011.

### Other

**Patents:**
The design of the LVAPOR is protected by the following patents US D653,795; D651738 CN ZL201130028359.7; ZL201130028360.X, TW pat. pending MX 35699; pat. pending CA.


Copyright © 2024 RAB Lighting All Rights Reserved Note: Specifications are subject to change at any time without notice

## Technical Specifications (continued)

**Warranty:**
RAB warrants that our LED products will be free from defects in materials and workmanship for a period of five (5) years from the date of delivery to the end user, including coverage of light output, color stability, driver performance and fixture finish. RAB's warranty is subject to all terms and conditions found at rablighting.com/warranty.

**Buy American Act Compliance:**
RAB values USA manufacturing! Upon request, RAB may be able to manufacture this product to be compliant with the Buy American Act (BAA). Please contact customer service to request a quote for the product to be made BAA compliant.

## Dimensions

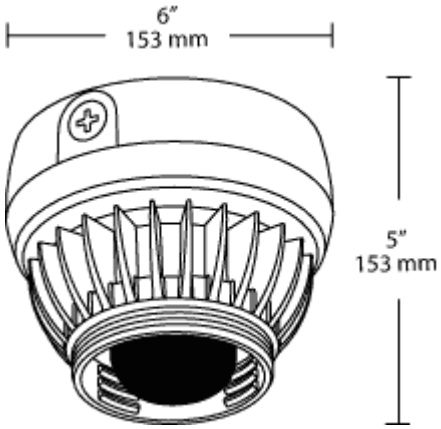


## Features

- High performance LED light engine
- 100,000-hour life based on LM-80 results and TM-21 calculations
- Die Cast Aluminum Housing
- Classic design with state of the art LED technology


Copyright © 2024 RAB Lighting All Rights Reserved Note: Specifications are subject to change at any time without notice