VXLED26YDG/PCS2



High performance LED Vaporproof fixture. A classic design with cutting edge LED technology. Comes with die cast guard and frosted globe.

Color: Natural

Weight: 5.1 lbs

Project:	**Type:**
Prepared By:	**Date:**

Driver Info

Type	Constant Current
120V	N/A
208V	0.14A
240V	0.13A
277V	0.11A
Input Watts	26.2W

LED Info

Watts	26W
Color Temp	3000K (Warm)
Color Accuracy	81 CRI
L70 Lifespan	100,000 Hours
Lumens	1,401 lm
Efficacy	53.5 lm/W

Technical Specifications

Compliance

UL Listed:
Suitable for wet locations as a downlight

IESNA LM-79 & LM-80 Testing:
RAB LED luminaires and LED components have been tested by an independent laboratory in accordance with IESNA LM-79 and LM-80.

Electrical

Photocell:
277V Swivel photocell included. Photocell is compatible with 208V-277V.

Performance

Lifespan:
100,000-Hour LED lifespan based on IES LM-80 results and TM-21 calculations

Construction

Globes and Guards:
Vaporproof LEDs are compatible with RAB Globes and Guards

Cold Weather Starting:
The minimum starting temperature is -40°C (-40°F)

Ambient Temperature:
Suitable for use in up to 40°C (104°F)

Thermal Management (Patent Pending):
Die-cast LED housing designed for maximum heat dissipation

Housing:
All die-cast aluminum construction

Gaskets:
High-temperature silicone

Finish:
Natural shot blasted aluminum

Mounting:
(3) 3/4" NPS conduit entry points

Guard and Globe:
Shot blasted guard with frosted globe

Green Technology:
Mercury and UV free. RoHS-compliant components.

LED Characteristics

LED:
Multi-chip 26W high-output, long-life LED

Color Consistency:
3-step MacAdam Ellipse binning to achieve consistent fixture-to-fixture color

Color Stability:
LED color temperature is warrantied to shift no more than 200K in color temperature over a 5-year period

Color Uniformity:
RAB's range of Correlated Color Temperature follows the guidelines of the American National Standard for Specifications for the Chromaticity of Solid State Lighting (SSL) Products, ANSI C38.377-2011.

Other

Patents:
The design of the LVAPOR is protected by the following patents US pat. pending; D651738 CN ZL201230040341.3; ZL201130028360.X, TW pat. 101301367 MX 35699; pat. pending CA.

Warranty:
RAB warrants that our LED products will be free from defects in materials and workmanship for a period of five (5) years from the date of delivery to the end user, including coverage of light output, color stability, driver performance and fixture finish. RAB's warranty is subject to all terms and conditions found at rablighting.com/warranty.

Copyright © 2024 RAB Lighting All Rights Reserved Note: Specifications are subject to change at any time without notice

Technical Specifications (continued)

Buy American Act Compliance:
RAB values USA manufacturing! Upon request, RAB may be able to manufacture this product to be compliant with the Buy American Act (BAA). Please contact customer service to request a quote for the product to be made BAA compliant.

Dimensions

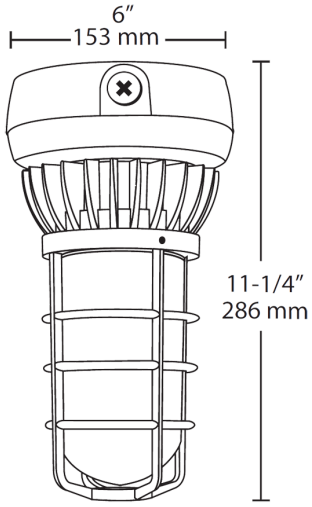

Features

- Vaporproof LED Ceiling Mount
- Superior Thermal Management (Patent Pending)
- All Die-Cast Aluminum Construction
- 100,000-hour life based on LM-80 results and TM-21 calculations
- Thermal Shock-Resistant Frosted Glass Globe
- Traditional Look, Cutting-Edge Technology
- 5-Year, No-Compromise Warranty

Copyright © 2024 RAB Lighting All Rights Reserved Note: Specifications are subject to change at any time without notice