WBLED18Y/PCS2



18 Watt LED wall sconce. Die-cast aluminum wall bracket with five 1/2" conduit openings with plugs.

Color: Bronze

Weight: 14.0 lbs

Project:	**Type:**
Prepared By:	**Date:**

Driver Info

Type	Constant Current
120V	N/A
208V	0.18A
240V	0.15A
277V	0.12A
Input Watts	17.1W

LED Info

Watts	18W
Color Temp	3000K (Warm)
Color Accuracy	75 CRI
L70 Lifespan	100,000 Hours
Lumens	1,886 lm
Efficacy	110.3 lm/W

Technical Specifications

Electrical

Driver:
Constant Current, Class 2, 100-277V, 50/60 Hz, 4kV Surge Protection, 700mA, 120V: 0.24A, 208V: 0.18A, 240V: 0.15A, 277V: 0.12A

THD:
8.22% at 120V, 8.87% at 277V

Power Factor:
99.08% at 120V, 94.4% at 277V

Photocell:
277V Swivel photocell included. Photocell is compatible with 208V-277V.

Compliance

UL Listed:
Suitable for wet locations

IESNA LM-79 & LM-80 Testing:
RAB LED luminaires and LED components have been tested by an independent laboratory in accordance with IESNA LM-79 and LM-80.

LED Characteristics

LEDs:
Long-life, high-efficiency, surface-mount LEDs

Color Consistency:
5-step MacAdam Ellipse binning to achieve consistent fixture-to-fixture color

Color Stability:
LED color temperature is warrantied to shift no more than 200K in color temperature over a 5-year period

Color Uniformity:
RAB's range of Correlated Color Temperature follows the guidelines of the American National Standard for Specifications for the Chromaticity of Solid State Lighting (SSL) Products, ANSI C78.377-2017

Performance

Lifespan:
100,000-Hour LED lifespan based on IES LM-80 results and TM-21 calculations

Optical

BUG Rating:
B1 U3 G1

Construction

Cold Weather Starting:
The minimum starting temperature is -40°C (-40°F)

Thermal Management:
Cast aluminum Thermal Management system for optimal heat sinking. The BLED is designed for cool operation, maximum efficiency and long life by minimizing LED junction temperature.

Housing:
Reinforced Die-cast Aluminum

Lens:
Polycarbonate lens

Reflector:
Vacuum-metalized polycarbonate

Gaskets:
High-temperature silicone gaskets seal out moisture gaskets seal out moisture

Mounting:
Die-cast aluminum wall bracket with five (5) 1/2" conduit openings with plugs

Finish:
Our environmentally friendly polyester powder coatings are formulated for high-durability and long-lasting color

Green Technology:
Mercury and UV free. RoHS-compliant components.

Copyright © 2024 RAB Lighting All Rights Reserved Note: Specifications are subject to change at any time without notice

Technical Specifications (continued)

Other

Patents:
The design of WBLED is protected by patents in US, Canada & China

Warranty:
RAB warrants that our LED products will be free from defects in materials and workmanship for a period of five (5) years from the date of delivery to the end user, including coverage of light output, color stability, driver performance and fixture finish. RAB's warranty is subject to all terms and conditions found at rablighting.com/warranty.

Buy American Act Compliance:
RAB values USA manufacturing! Upon request, RAB may be able to manufacture this product to be compliant with the Buy American Act (BAA). Please contact customer service to request a quote for the product to be made BAA compliant.

Dimensions

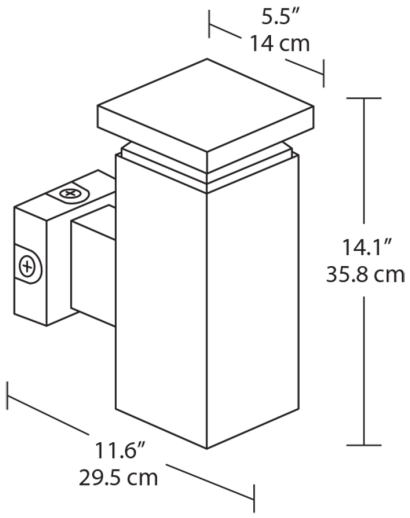

Features

- 18 Watt LED architectural wall sconce
- Companion fixture to RAB BLED Round and Square Bollard
- Durable construction and vandal-resistant polycarbonate lens
- 100,000-hour LED lifespan

Ordering Matrix

Family	Shape	Wattage	Color Temp	Finish	Photocell Option
WBLED		18	Y		/PCS2
	Blank = Square **R =** Round	**18 =** 18W	**Blank =** 5000K Cool **Y =** 3000K Warm **N =** 4000K Neutral	**Blank =** Bronze **W =** White	**Blank =** No Option **/PCS =** 120V Swivel Photocell **/PCS2 =** 277V Swivel Photocell

Copyright © 2024 RAB Lighting All Rights Reserved Note: Specifications are subject to change at any time without notice