INSTRUCTIONS
WP2LED™ INSTALLATION

RAB Lighting is committed to creating high-quality, affordable, well-designed and energy-efficient LED lighting and controls that make it easy for electricians to install and end users to save energy. We'd love to hear your comments. Please call the Marketing Department at 888-RAB-1000 or email: marketing@rablighting.com



WP2LED - Wall Pack

IMPORTANT

READ CAREFULLY BEFORE INSTALLING FIXTURE. RETAIN THESE INSTRUCTIONS FOR FUTURE REFERENCE.
RAB fixtures must be wired in accordance with the National Electrical Code and all applicable local codes. Proper grounding is required for safety. THIS PRODUCT MUST BE INSTALLED IN ACCORDANCE WITH THE APPLICABLE INSTALLATION CODE BY A PERSON FAMILIAR WITH THE CONSTRUCTION AND OPERATION OF THE PRODUCT AND THE HAZARDS INVOLVED.
WARNING: Make certain power is OFF before installing or maintaining fixture. No user serviceable parts inside.
CAUTION: For proper weatherproof function all gaskets must be seated properly and all screws inserted and tightened firmly. Apply weatherproof silicone sealant around the edge of the housing where it meets the wall. This is especially important with an uneven wall surface. Silicone all plugs and unused conduit entries.

MOUNTING

Fixture should not be recessed. Housing must be mounted on wall with lens facing down as shown above. Use the **Drilling Template** on the inside back surface of the **housing** to match most standard junction boxes or lag bolt the housing to surface as shown in Fig. 1.

1. Open **Door Lens** by loosening *(2)* screws as shown in Fig. 2.
2. Prepare the **housing** for use by drilling out the appropriate holes.
3. Line up the **Housing** in desired location and mount securely using mounting hardware *(by others)*. Caulk bolt/screw heads.
4. Wire the Fixture leads to the supply wires using UL listed wire connectors according to NEC and local codes *(Fig. 3)*.
5. Close **Door Lens** and tighten *(2)* screws on the **Door Lens**.

Fig: 1

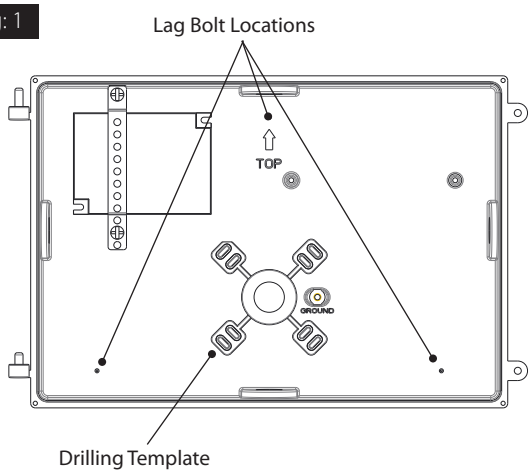

Fig: 2

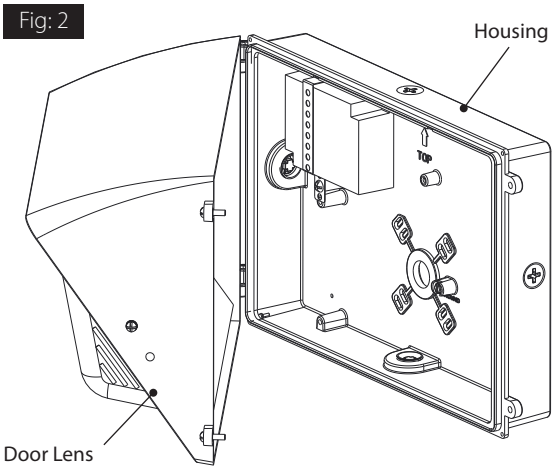

INSTRUCTIONS
WP2LED™ INSTALLATION

RAB Lighting is committed to creating high-quality, affordable, well-designed and energy-efficient LED lighting and controls that make it easy for electricians to install and end users to save energy. We'd love to hear your comments. Please call the Marketing Department at 888-RAB-1000 or email: marketing@rablighting.com

0-10V DIMMABLE WIRING

For 0-10V dimming, follow the wiring directions *(Fig. 3)*.

1. For Junction Box Mount, feed wires through silicone wiring plug into the junction box.
2. Connect the **black** fixture lead to the **LINE** supply lead.
3. Connect the **white** fixture lead to the **COMMON** supply lead.
4. Connect the **GROUND** wire from fixture to supply ground. Do NOT connect the **GROUND** of the dimming fixture to the output.
5. Connect the **purple** fixture lead to the **(V+) DIM** lead.
6. Connect the **pink** fixture lead to the **(V-) DIM** lead.
7. Cap the **yellow** fixture lead, if present. Do NOT connect.

Fig. 3

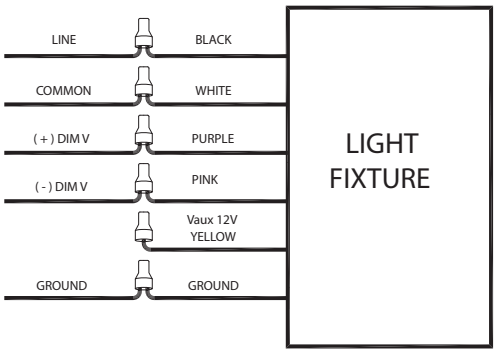

TROUBLESHOOTING

1. Check that the line voltage at the fixture is correct. Refer to wiring directions.
2. Is the fixture grounded properly?
3. Be sure the photocell, if used, is functioning properly.

CLEANING & MAINTENANCE

CAUTION: Be sure fixture temperature is cool enough to touch. Do not clean or maintain while fixture is energized.

1. Clean glass lens with non-abrasive glass cleaning solution.
2. Do not open the fixture to clean the LED. Do not touch the LED.

DIMENSIONS

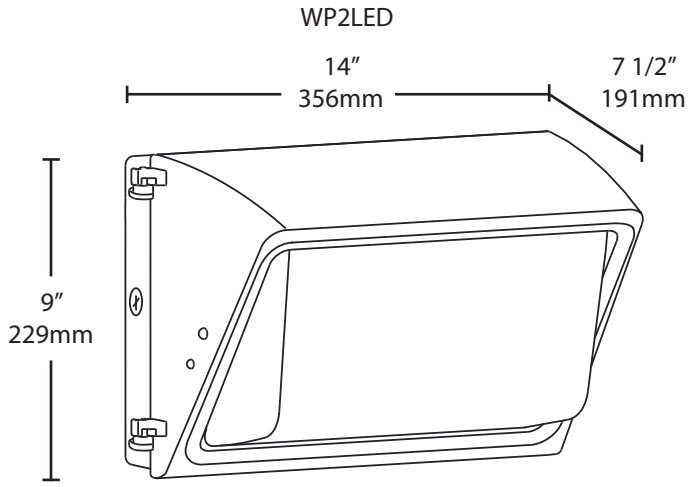

INSTRUCTIONS
WP2LED™ INSTALLATION

RAB Lighting is committed to creating high-quality, affordable, well-designed and energy-efficient LED lighting and controls that make it easy for electricians to install and end users to save energy. We'd love to hear your comments. Please call the Marketing Department at 888-RAB-1000 or email: marketing@rablighting.com

BATTERY BACKUP MODELS

WIRING

CAUTION: FOR BATTERY BACKUP FIXTURE. Voltage could be present in **BATTERY**. To prevent high voltage from being present on output leads, inverter connector must be open. Do not join **BATTERY** connector until installation is complete and AC power is supplied to the emergency driver *(Fig. 4)*.

NOTE: Make sure that the necessary branch circuit wiring is available. An **UNSWITCHED** AC source of power is required. The emergency driver must be fed from the same branch circuit as the LED driver.

CAUTION: Do not use any supply voltage other than 120-277V 50/60 HZ.

1. Connect **UNSWITCHED HOT** fixture lead to **HOT** AC supply line.
2. If using an **UNSWITCHED** circuit, connect **UNSWITCHED** and **SWITCHED** lines together.
3. If using a **SWITCHED** circuit, connect **SWITCHED HOT** AC fixture lead to the external **SWITCHED**.
4. Connect the **WHITE/NEUTRAL** fixture lead to the **WHITE/NEUTRAL** supply line.
5. For 0-10V Dimming, connect **DIM (+)** and **DIM (-)** to the supply **DIM (+)** and **DIM (-)**.
6. Connect **GROUND** lead from the fixture to the supply ground. Do not connect **GROUND** to the output leads.
7. All unused lead must be capped and insulated.
8. After installation is complete, supply AC power to the fixture and connect the **BATTERY**.
9. When power is on, the fixture should be on and the Charging Indicator Light should illuminate to indicate the battery is charging.
10. Once the **BATTERY** has charged for at least one hour, a short duration test may be performed by pressing the test button.
11. After the battery has charged for 24 hours, a long duration test can be performed by shutting power to the fixture.

OPERATION

1. When AC power is applied, the charging indicator light is illuminated, indicating that the **BATTERY** is being charged.
2. When power fails, the standby power automatically switches to emergency power *(internal battery)*, operating at reduced illumination. Not all LED boards will illuminate with standby power. The emergency driver supplies 8W of power in standby power for a minimum of 90 minutes.
3. When AC power is restored, the emergency driver automatically returns to charging mode.

MAINTENANCE

Although no routine maintenance is required to keep the emergency driver functional, it should be checked periodically to ensure that it is working. The following schedule is recommended:

1. Visually inspect the charging indicator light monthly. It should be illuminated.
2. Test the emergency operation of the fixture at 30-day intervals for a minimum of 30 seconds.
3. Conduct a 90-minute discharge test once a year. Fixture would operate at reduced illumination for a minimum of 90 minutes.

TROUBLESHOOTING

1. Is the fixture grounded properly?
2. If the charging indicator light does not illuminate after pressing the test button, check if battery is connected properly.

Note: *These instructions do not cover all details or variations in equipment nor do they provide for every possible situation during installation, operation or*

FIG. 4

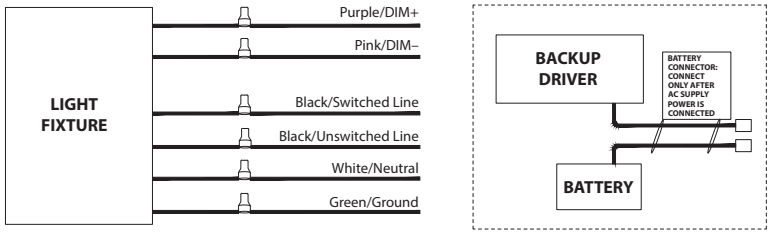

© 2024 RAB LIGHTING Inc.

WP2LED - IN - 0324
73649-RAB