WPLED26/E/PCS2



Color: Bronze

Weight: 7.2 lbs

Project:	**Type:**
Prepared By:	**Date:**

Driver Info

Type	Constant Current
120V	0.22A
208V	0.13A
240V	0.11A
277V	0.10A
Input Watts	28.7W

LED Info

Watts	26W
Color Temp	5000K (Cool)
Color Accuracy	70 CRI
L70 Lifespan	100,000 Hours
Lumens	3,851 lm
Efficacy	134.2 lm/W

Technical Specifications

Electrical

Driver:
Constant Current, Class 2, 120-277V, 50/60Hz, 120V: 0.22A, 208V: 0.13A, 240V: 0.11A, 277V 0.10A

Dimming Driver:
Driver includes dimming control wiring for 0-10V dimming systems. Requires separate 0-10V DC dimming circuit. Dims down to 10%.

THD:
10.68% at 120V, 10.68% at 277V

Power Factor:
95.4% at 120V, 95.4% at 277V

Battery Backup:
Minimum starting temperature is 0°C/32°F

Battery Backup Light Loss Factor:
0.39

Battery Mode:
Light output use LLD of.76 to simulate light output during battery mode operation.

Photocell:
277V Swivel photocell included. Photocell is compatible with 208V-277V.

Compliance

UL Listed:
Suitable for Wet Locations as downlight. Wall Mount Only. Battery Backup UL 924 Listed Emergency Lighting Power Supply.

DLC Listed:
This product is listed by Design Lights Consortium (DLC) as an ultra-efficient premium product that qualifies for the highest tier of rebates from DLC Member Utilities. Designed to meet DLC 5.1 requirements.
DLC Product Code: P0000170I

Performance

Lifespan:
100,000-Hour LED lifespan based on IES LM-80 results and TM-21 calculations

Wattage Equivalency:
Equivalent to 150W Metal Halide

LED Characteristics

LED:
Two (2) 13W high-output, long-life LEDs

Color Consistency:
7-step MacAdam Ellipse binning to achieve consistent fixture-to-fixture color

Color Stability:
LED color temperature is warrantied to shift no more than 200K in color temperature over a 5-year period

Color Uniformity:
RAB's range of Correlated Color Temperature follows the guidelines of the American National Standard for Specifications for the Chromaticity of Solid State Lighting (SSL) Products, ANSI C78.377-2017.

Construction

Ambient Temperature:
Suitable for use in up to 35°C (95°F)

Thermal Management:
Optimized using computational fluid dynamics software to ensure long LED and driver lifespan

Gaskets:
High-temperature silicone

Housing:
Precision die-cast aluminum housing, lens frame and mounting arm

Finish:
Formulated for high durability and long-lasting color

Green Technology:
Mercury and UV free. RoHS-compliant components.

Copyright © 2024 RAB Lighting All Rights Reserved Note: Specifications are subject to change at any time without notice

Technical Specifications (continued)

Other

Patents:
The WPLED26 design is protected by U.S. Patent D634878 and Patents pending in the U.S., Canada, China, Taiwan and Mexico.

Buy American Act Compliance:
RAB values USA manufacturing! Upon request, RAB may be able to manufacture this product to be compliant with the Buy American Act (BAA). Please contact customer service to request a quote for the product to be made BAA compliant.

Optical

BUG Rating:
B1 U0 G0

Dimensions

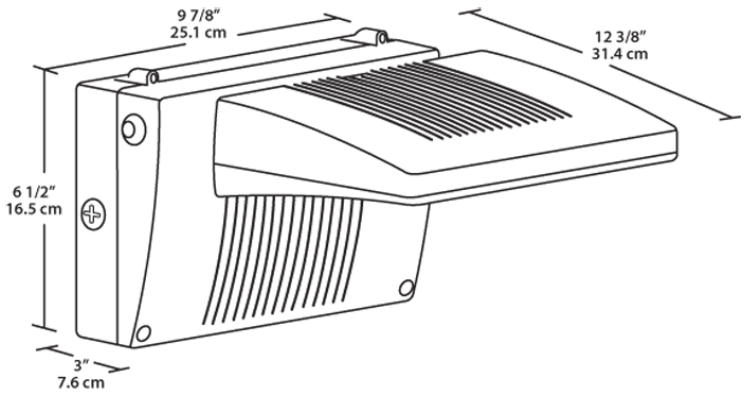

Features

- Maintains 70% of initial lumens at 100,000-hours
- Weatherproof high temperature silicone gaskets
- Superior heat sinking with die cast aluminum housing and external fins
- 100 up to 277 Volts
- 5-Year, No-Compromise Warranty

Copyright © 2024 RAB Lighting All Rights Reserved Note: Specifications are subject to change at any time without notice