INSTRUCTIONS

WPLED® 18W-26W INSTALLATION

RAB Lighting is committed to creating high-quality, affordable, well-designed and energy-efficient LED lighting and controls that make it easy for electricians to install and end users to save energy. We'd love to hear your comments. Please call the Marketing Department at 888-RAB-1000 or email: marketing@rablighting.com



Junction Box



Surface Mount

IMPORTANT

READ CAREFULLY BEFORE INSTALLING FIXTURE. RETAIN THESE INSTRUCTIONS FOR FUTURE REFERENCE.

RAB fixtures must be wired in accordance with the National Electrical Code and all applicable local codes. Proper grounding is required for safety. THIS PRODUCT MUST BE INSTALLED IN ACCORDANCE WITH THE APPLICABLE INSTALLATION CODE BY A PERSON FAMILIAR WITH THE CONSTRUCTION AND OPERATION OF THE PRODUCT AND THE HAZARDS INVOLVED.

WARNING: Make certain power is OFF before installing or maintaining fixture. No user serviceable parts inside.

CAUTION: For proper weatherproof function all gaskets must be seated properly and all screws inserted and tightened firmly. Apply weatherproof silicone sealant around the edge of the wall mounting box and/or junction box. This is especially important with an uneven wall surface. Silicone all plugs and unused conduit entries.

JUNCTION BOX MOUNT FOR CONDUIT

For use on applications where conduit wiring is needed.

1. Loosen *(4)* **Lens Screws** and swing open **Hinged Door**. Screws will remain in place with O-Rings.
2. Loosen and remove *(2)* **Housing Screws**. Remove **Housing** from **Back Box**. Keep **Housing Gasket** intact for re-assembly.
3. Feed wires into **Back Box** through **Silicone Wiring Plug**, if not using conduit/ connectors.
4. Secure **Back Box** to the mounting surface using hardware appropriate for that mounting surface. Silicone around the edge of **Back Box Gasket** *(self-adhesive)* and/or junction box.
5. Wire the fixture using UL listed wire connectors according to NEC and local codes. Apply sealant to all unused conduit entry points.
6. Place **Gasket** between **Back Box** and **Housing**. Re-mount **Housing** to **Back Box**. Check **Housing Gasket** seal all around the **Back Box**.
7. Re-mount **Door** to **Housing**. Tighten *(4)* **Lens Screws**. Check door gasket *(not shown)* seal.
8. Fixture is UL Listed for down and up lighting and may be mounted in either position. Fixture may not melt heavy snow accumulation in an uplight position.

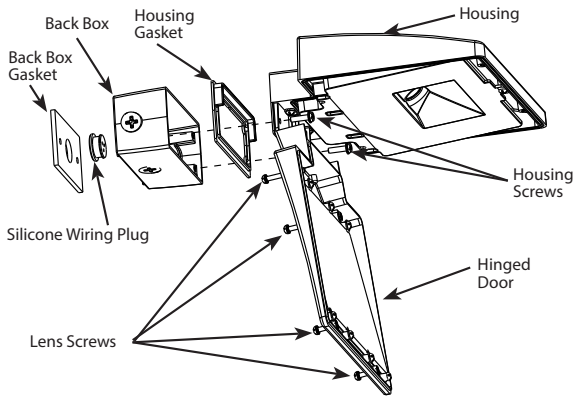

SURFACE MOUNT FOR RECESSED JUNCTION BOX

For use with recessed junction box and wiring.

1. Mount **Surface Plate** to fixture with *(4)* **Surface Plate Screws**. There are two screws from the front and two screws from the back. Make sure **Housing Gasket** makes complete seal all the way around.
2. Use supplied **Crossbar**. Mount **Crossbar** to recessed junction box with *(2)* screws.
3. Place **Junction Box Gasket** on back of the fixture. **Gasket** should create seal against mounting surface.
4. Wire fixture to supply wires in recessed junction box according to wiring section.
5. Use 1/4 x 20 stainless steel **Mounting Screw** to attach fixture to **Crossbar**. Tighten **Mounting Screw**.
6. Cover **Screw** with **Cap**, provided.
7. Fixture is UL Listed for down and up lighting and may be mounted in either position. Fixture may not melt heavy snow accumulation in an uplight position.

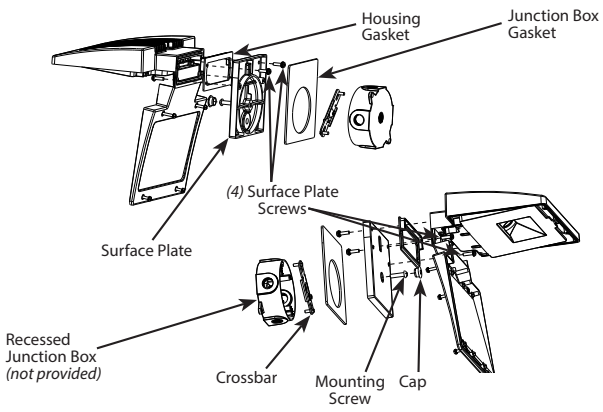

INSTRUCTIONS

WPLED® 18W-26W INSTALLATION

RAB Lighting is committed to creating high-quality, affordable, well-designed and energy-efficient LED lighting and controls that make it easy for electricians to install and end users to save energy. We'd love to hear your comments. Please call the Marketing Department at 888-RAB-1000 or email: marketing@rablighting.com

JUNCTION BOX

1. The Junction box has *(4)* conduit entry points on the center of each side and *(1)* in the center back.
2. **Mounting Points** are dimensioned below.

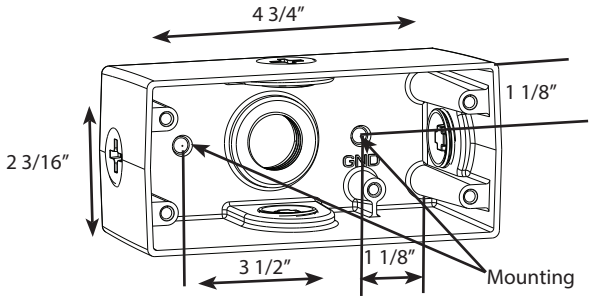

0-10V DIMMABLE WIRING

Universal voltage driver permits operation at 120V thru 277V, 50 or 60 Hz. For 0-10V Dimming follow the wiring directions shown below.

1. Connect the black fixture lead to the (+) **LINE** supply lead.
2. Connect the white fixture lead to the (-) **COMMON** supply lead.
3. Connect the **GROUND** wire from fixture to supply ground. Do NOT connect the **GROUND** of the dimming fixture to the output.
4. Connect the purple fixture lead to the (V+) DIM lead.
5. Connect the pink *(or gray)* fixture lead to the (V-) DIM lead.
6. Cap the yellow fixture lead, if present. Do NOT connect.

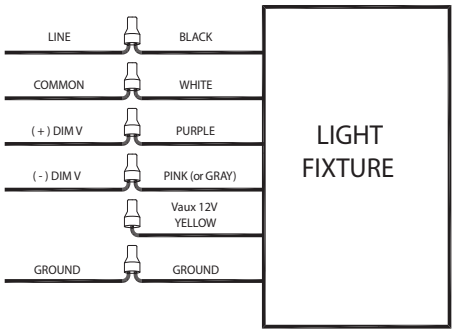

CLEANING & MAINTENANCE

CAUTION: Be sure fixture temperature is cool enough to touch. Do not clean or maintain while fixture is energized.

1. Clean glass lens with non-abrasive glass cleaning solution.
2. Do not open the fixture to clean the LED. Do not touch the LED.

TROUBLESHOOTING

1. Check that the line voltage at the fixture is correct. Refer to wiring directions.
2. Is the fixture grounded properly?
3. Is the photocell, if used, functioning properly?

Note: *These instructions do not cover all details or variations in equipment nor do they provide for every possible situation during installation, operation or maintenance.*

Note: *These instructions do not cover all details or variations in equipment nor do they provide for every possible situation during installation, operation or maintenance.*

© 2021 RAB LIGHTING Inc.

WPLED 18W/26W - 1121
73161-RAB

Easy Answers

rablighting.com
Visit our website for product info

Tech Help Line
Call our experts: 888 722-1000

e-mail
Answered promptly - sales@rablighting.com

Free Lighting Layouts
Answered online or by request

RAB WARRANTY: *RAB's warranty is subject to all terms and conditions found at rablighting.com/warranty.*