# WPLEDC80N/480



LED 80W Wall packs. 3 cutoff options. patent-pending thermal management system. 100,000 hour L70 lifespan. 5-year, no-compromise warranty.

Color: Bronze

Weight: 17.6 lbs

| | |
|---|---|
| **Project:** | **Type:** |
| **Prepared By:** | **Date:** |

### Driver Info

| | |
|---|---|
| Type | Constant Current |
| 120V | N/A |
| 208V | N/A |
| 240V | N/A |
| 277V | N/A |
| Input Watts | 83.8W |

### LED Info

| | |
|---|---|
| Watts | 80W |
| Color Temp | 4000K (Neutral) |
| Color Accuracy | 75 CRI |
| L70 Lifespan | 100,000 Hours |
| Lumens | 10,108 lm |
| Efficacy | 120.6 |

## Technical Specifications

### Compliance

**UL Listed:**
Suitable for wet locations

**IESNA LM-79 & LM-80 Testing:**
RAB LED luminaires and LED components have been tested by an independent laboratory in accordance with IESNA LM-79 and LM-80.

**IP Rating:**
Ingress protection rating of IP66 for dust and water

**DLC Listed:**
This product is listed by Design Lights Consortium (DLC) as an ultra-efficient premium product that qualifies for the highest tier of rebates from DLC Member Utilities. Designed to meet DLC 5.1 requirements.
DLC Product Code: PWAYMMWT

### LED Characteristics

**LEDs:**
Two (2) multi-chip, high-output, long-life LEDs

**Color Consistency:**
3-step MacAdam Ellipse binning to achieve consistent fixture-to-fixture color

**Color Stability:**
LED color temperature is warrantied to shift no more than 200K in color temperature over a 5-year period

**Color Uniformity:**
RAB's range of Correlated Color Temperature follows the guidelines of the American National Standard for Specifications for the Chromaticity of Solid State Lighting (SSL) Products, ANSI C78.377.2011.

### Electrical

**Driver:**
Constant Current, Class 2, 480V, 50-60Hz

**Dimming Driver:**
Driver includes dimming control wiring for 0-10V dimming systems. Requires separate 0-10V DC dimming circuit. Dims down to 10%.

**THD:**
10.1% at 480V

**Power Factor:**
90.5% at 480V

**Surge Protection:**
4kV

**Ballast Volts:**
480V

### Performance

**Lifespan:**
100,000-Hour LED lifespan based on IES LM-80 results and TM-21 calculations

**Wattage Equivalency:**
Replaces 320W Metal Halide

### Construction

**Cold Weather Starting:**
The minimum starting temperature is -40°C (-40°F)

**Maximum Ambient Temperature:**
Suitable for use in up to 40°C (104°F)

**Thermal Management:**
Superior thermal management with external "Air-Flow" fins

**Housing:**
Precision die-cast aluminum housing, lens frame

**Mounting:**
Die-cast aluminum wall bracket with (5) 1/2" conduit openings with plugs. Two-piece bracket with tether for ease of installation and wiring.

**Arm:**
Die-cast aluminum with wiring access plate


Copyright © 2024 RAB Lighting All Rights Reserved Note: Specifications are subject to change at any time without notice

## Technical Specifications (continued)

**Cutoff:**
Cutoff (7.5°)

**Lens:**
Tempered glass

**Reflector:**
Specular vacuum metallized polycarbonate

**Gaskets:**
High-temperature silicone gaskets, including a wiring plug gasket, seal out moisture

**Finish:**
Formulated for high durability and long-lasting color

**Green Technology:**
Mercury and UV free. RoHS-compliant components.

### Other

**Patents:**
The WPLED design is protected by patents in the U.S. Pat D653,377, Canada Pat. 142252, China Pat. ZL201130356930.8, and Mexico Pat. 36921 and pending patent in TW.

**Warranty:**
RAB warrants that our LED products will be free from defects in materials and workmanship for a period of five (5) years from the date of delivery to the end user, including coverage of light output, color stability, driver performance and fixture finish. RAB's warranty is subject to all terms and conditions found at rablighting.com/warranty.

**Replacement:**
Replaces up to 400W Metal Halide

**Buy American Act Compliance:**
RAB values USA manufacturing! Upon request, RAB may be able to manufacture this product to be compliant with the Buy American Act (BAA). Please contact customer service to request a quote for the product to be made BAA compliant.

### Optical

**BUG Rating:**
B1 U0 G2


Copyright © 2024 RAB Lighting All Rights Reserved Note: Specifications are subject to change at any time without notice

# WPLEDC80N/480

## Dimensions

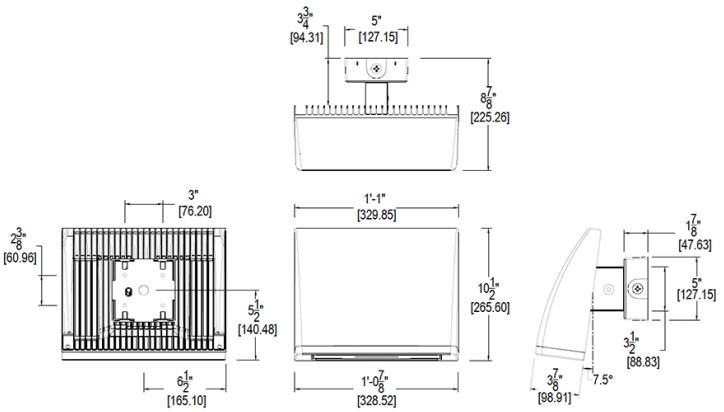


## Features

- High performance LED light engine
- Maintains 70% of initial lumens at 100,000-hours
- Weatherproof high temperature silicone gaskets
- Superior heat sinking with die cast aluminum housing and external fins
- Traditional wall pack look from the front
- 3 cutoff options
- 5-Year, No-Compromise Warranty

## Ordering Matrix

| Family | Cutoff | Wattage | Color Temp | Finish | Driver Options | Options | Other Options |
|---|---|---|---|---|---|---|---|
| WPLED | C | 80 | N | | /480 | | |
| | **C =** Cutoff (7.5 degrees)<br>**FC =** Full Cutoff (0 degrees)<br>**Blank =** Standard (15 degrees) | **52 =** 52W<br>**80 =** 80W | **Blank =** 5000K Cool<br>**N =** 4000K Neutral<br>**Y =** 3000K Warm | **Blank =** Bronze<br>**W =** White | **Blank =** 120-277V<br>**/D10 =** 0-10V Dimming<br>**/BL =** Bi-Level<br>**/480 =** 480V | **Blank =** No Option<br>**/PCS =** 120V Swivel Photocell<br>**/PCS2 =** 277V Swivel Photocell<br>**/PCS4 =** 480V Swivel Photocell<br>**/LC =** Lightcloud Controller | **Blank =** Standard<br>**USA =** BAA Compliant |


Copyright © 2024 RAB Lighting All Rights Reserved Note: Specifications are subject to change at any time without notice