WPLEDC80Y/480



LED 80W Wall packs. 3 cutoff options. patent-pending thermal management system. 100,000 hour L70 lifespan. 5-year, no-compromise warranty.

Color: Bronze

Weight: 17.6 lbs

Project:	**Type:**
Prepared By:	**Date:**

Driver Info

Type	Constant Current
120V	N/A
208V	N/A
240V	N/A
277V	N/A
Input Watts	83.5W

LED Info

Watts	80W
Color Temp	3000K (Warm)
Color Accuracy	72 CRI
L70 Lifespan	100,000 Hours
Lumens	10,041 lm
Efficacy	120.2

Technical Specifications

Compliance

UL Listed:
Suitable for wet locations

IESNA LM-79 & LM-80 Testing:
RAB LED luminaires and LED components have been tested by an independent laboratory in accordance with IESNA LM-79 and LM-80.

IP Rating:
Ingress protection rating of IP66 for dust and water

DLC Listed:
This product is listed by Design Lights Consortium (DLC) as an ultra-efficient premium product that qualifies for the highest tier of rebates from DLC Member Utilities. Designed to meet DLC 5.1 requirements.
DLC Product Code: PTRQESCN

LED Characteristics

LEDs:
Two (2) multi-chip, high-output, long-life LEDs

Color Consistency:
3-step MacAdam Ellipse binning to achieve consistent fixture-to-fixture color

Color Stability:
LED color temperature is warrantied to shift no more than 200K in color temperature over a 5-year period

Color Uniformity:
RAB's range of Correlated Color Temperature follows the guidelines of the American National Standard for Specifications for the Chromaticity of Solid State Lighting (SSL) Products, ANSI C78.377.2011.

Electrical

Driver:
Constant Current, Class 2, 480V, 50-60Hz

Dimming Driver:
Driver includes dimming control wiring for 0-10V dimming systems. Requires separate 0-10V DC dimming circuit. Dims down to 10%.

THD:
10.1% at 480V

Power Factor:
90.5% at 480V

Surge Protection:
4kV

Ballast Volts:
480V

Performance

Lifespan:
100,000-Hour LED lifespan based on IES LM-80 results and TM-21 calculations

Wattage Equivalency:
Replaces 320W Metal Halide

Construction

Cold Weather Starting:
The minimum starting temperature is -40°C (-40°F)

Maximum Ambient Temperature:
Suitable for use in up to 40°C (104°F)

Thermal Management:
Superior thermal management with external "Air-Flow" fins

Housing:
Precision die-cast aluminum housing, lens frame

Mounting:
Die-cast aluminum wall bracket with (5) 1/2" conduit openings with plugs. Two-piece bracket with tether for ease of installation and wiring.

Arm:
Die-cast aluminum with wiring access plate

Copyright © 2024 RAB Lighting All Rights Reserved Note: Specifications are subject to change at any time without notice

Technical Specifications (continued)

Cutoff:
Cutoff (7.5°)

Lens:
Tempered glass

Reflector:
Specular vacuum metallized polycarbonate

Gaskets:
High-temperature silicone gaskets, including a wiring plug gasket, seal out moisture

Finish:
Formulated for high durability and long-lasting color

Green Technology:
Mercury and UV free. RoHS-compliant components.

Other

Patents:
The WPLED design is protected by patents in the U.S. Pat D653,377, Canada Pat. 142252, China Pat. ZL201130356930.8, and Mexico Pat. 36921 and pending patent in TW.

Warranty:
RAB warrants that our LED products will be free from defects in materials and workmanship for a period of five (5) years from the date of delivery to the end user, including coverage of light output, color stability, driver performance and fixture finish. RAB's warranty is subject to all terms and conditions found at rablighting.com/warranty.

Replacement:
Replaces up to 400W Metal Halide

Buy American Act Compliance:
RAB values USA manufacturing! Upon request, RAB may be able to manufacture this product to be compliant with the Buy American Act (BAA). Please contact customer service to request a quote for the product to be made BAA compliant.

Optical

BUG Rating:
B1 U0 G2

Copyright © 2024 RAB Lighting All Rights Reserved Note: Specifications are subject to change at any time without notice

WPLEDC80Y/480

Dimensions

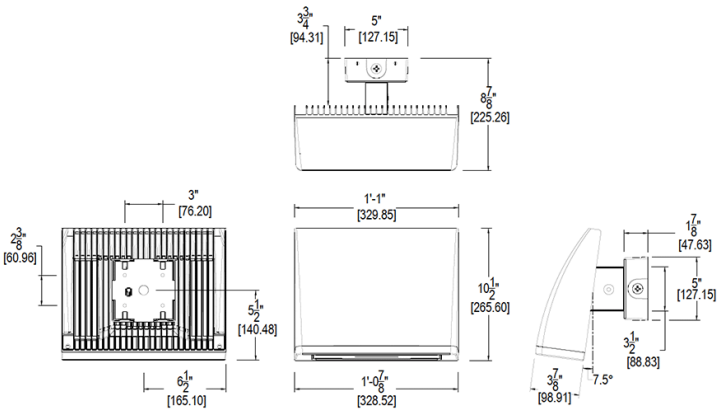

Features

- High performance LED light engine
- Maintains 70% of initial lumens at 100,000-hours
- Weatherproof high temperature silicone gaskets
- Superior heat sinking with die cast aluminum housing and external fins
- Traditional wall pack look from the front
- 3 cutoff options
- 5-Year, No-Compromise Warranty

Ordering Matrix

Family	Cutoff	Wattage	Color Temp	Finish	Driver Options	Options	Other Options
WPLED	C	80	Y		/480		
	C = Cutoff (7.5 degrees) **FC =** Full Cutoff (0 degrees) **Blank =** Standard (15 degrees)	**52 =** 52W **80 =** 80W	**Blank =** 5000K Cool **N =** 4000K Neutral **Y =** 3000K Warm	**Blank =** Bronze **W =** White	**Blank =** 120-277V **/D10 =** 0-10V Dimming **/BL =** Bi-Level **/480 =** 480V	**Blank =** No Option **/PCS =** 120V Swivel Photocell **/PCS2 =** 277V Swivel Photocell **/PCS4 =** 480V Swivel Photocell **/LC =** Lightcloud Controller	**Blank =** Standard **USA =** BAA Compliant

Copyright © 2024 RAB Lighting All Rights Reserved Note: Specifications are subject to change at any time without notice