# WPLEDFC52N/BL



LED 52W Wall packs. 3 cutoff options. patent-pending thermal management system. 100,000 hour L70 lifespan. 5-year, no-compromise warranty.

Color: Bronze

Weight: 17.7 lbs

| | |
|---|---|
| **Project:** | **Type:** |
| **Prepared By:** | **Date:** |

### Driver Info

| | |
|---|---|
| Type | Constant Current |
| 120V | 0.51A |
| 208V | 0.33A |
| 240V | 0.29A |
| 277V | 0.24A |
| Input Watts | 56W |

### LED Info

| | |
|---|---|
| Watts | 52W |
| Color Temp | 4000K (Neutral) |
| Color Accuracy | 76 CRI |
| L70 Lifespan | 100,000 Hours |
| Lumens | 7,253 lm |
| Efficacy | 129.5 lm/W |

## Technical Specifications

### Other

**WPLEDFC52 with Bi-Level Operation:**
Allows 50% and 100% output modes

**Warranty:**
RAB warrants that our LED products will be free from defects in materials and workmanship for a period of five (5) years from the date of delivery to the end user, including coverage of light output, color stability, driver performance and fixture finish. RAB's warranty is subject to all terms and conditions found at rablighting.com/warranty.

**Patents:**
The WPLED design is protected by patents in the U.S. Pat D653,377, Canada Pat. 142252, China Pat. ZL201130356930.8, and Mexico Pat. 36921 and pending patent in TW.

**Replacement:**
Replaces 250W HID

**Buy American Act Compliance:**
RAB values USA manufacturing! Upon request, RAB may be able to manufacture this product to be compliant with the Buy American Act (BAA). Please contact customer service to request a quote for the product to be made BAA compliant.

### Compliance

**UL Listed:**
Suitable for wet locations

**IESNA LM-79 & LM-80 Testing:**
RAB LED luminaires and LED components have been tested by an independent laboratory in accordance with IESNA LM-79 and LM-80.

### Performance

**Lifespan:**
100,000-Hour LED lifespan based on IES LM-80 results and TM-21 calculations

**Wattage Equivalency:**
Equivalent to 250W Metal Halide

### LED Characteristics

**LEDs:**
Two (2) multi-chip, high-output, long-life LEDs

**Color Consistency:**
3-step MacAdam Ellipse binning to achieve consistent fixture-to-fixture color

**Color Stability:**
LED color temperature is warrantied to shift no more than 200K in color temperature over a 5-year period

**Color Uniformity:**
RAB's range of Correlated Color Temperature follows the guidelines of the American National Standard for Specifications for the Chromaticity of Solid State Lighting (SSL) Products, ANSI C78.377-2017.

### Construction

**Ambient Temperature:**
Suitable for use in up to 40°C (104°F)

**Cold Weather Starting:**
The minimum starting temperature is -40°C (-40°F)

**Thermal Management:**
Cast aluminum Thermal Management system for optimal heat sinking. The WPLED is designed for cool operation, most efficient output and maximum LED life by minimizing LED junction temperature.

**Housing:**
Precision die-cast aluminum housing, lens frame

**Mounting:**
Die-cast aluminum wall bracket with (5) 1/2" conduit openings with plugs. Two-piece bracket with tether for ease of installation and wiring.

**Arm:**
Die-cast aluminum with wiring access plate


Copyright © 2024 RAB Lighting All Rights Reserved Note: Specifications are subject to change at any time without notice

## Technical Specifications (continued)

**Cutoff:**
Full-cutoff (0°)

**Reflector:**
Specular vacuum-metallized polycarbonate

**Gaskets:**
High-temperature silicone

**Lens:**
Tempered glass

**Finish:**
Formulated for high durability and long-lasting color

**Green Technology:**
Mercury and UV free. RoHS-compliant components.

### Electrical

**Driver:**
Constant Current, 720mA, Class 2, 100 - 277V, 50 - 60 Hz, 100 - 277VAC .8 Amps.

**THD:**
6.24% at 120V, 7.1% at 277V

**Power Factor:**
99.3% at 120V, 97.2% at 277V

**Surge Protection:**
6kV

### Optical

**BUG Rating:**
B1 U0 G1

## Dimensions

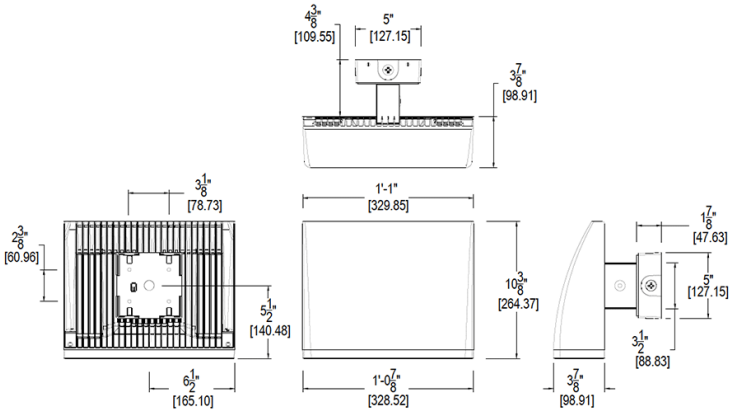


## Features

- High performance LED light engine
- Maintains 70% of initial lumens at 100,000-hours
- Weatherproof high temperature silicone gaskets
- Superior heat sinking with die cast aluminum housing and external fins
- Replaces 250W MH
- Traditional wall pack look from the front
- 3 cutoff options
- 5-Year, No-Compromise Warranty


Copyright © 2024 RAB Lighting All Rights Reserved Note: Specifications are subject to change at any time without notice

## Ordering Matrix

| Family | Cutoff | Wattage | Color Temp | Finish | Driver Options | Options | Other Options |
|---|---|---|---|---|---|---|---|
| WPLED | FC | 52 | N | | /BL | | |
| | **C =** Cutoff (7.5 degrees)<br>**FC =** Full Cutoff (0 degrees)<br>**Blank =** Standard (15 degrees) | **52 =** 52W<br>**80 =** 80W | **Blank =** 5000K Cool<br>**N =** 4000K Neutral<br>**Y =** 3000K Warm | **Blank =** Bronze<br>**W =** White | **Blank =** 120-277V<br>**/D10 =** 0-10V Dimming<br>**/BL =** Bi-Level<br>**/480 =** 480V | **Blank =** No Option<br>**/PCS =** 120V Swivel Photocell<br>**/PCS2 =** 277V Swivel Photocell<br>**/PCS4 =** 480V Swivel Photocell<br>**/LC =** Lightcloud Controller | **Blank =** Standard<br>**USA =** BAA Compliant |


Copyright © 2024 RAB Lighting All Rights Reserved Note: Specifications are subject to change at any time without notice