WPLEDR5W/PCS



LED 5W Wall packs. patent-pending thermal management system. 100,000 hour L70 lifespan. 5-year, no-compromise warranty.

Color: White

Weight: 1.6 lbs

Project:	**Type:**
Prepared By:	**Date:**

Driver Info

Type	Constant Current
120V	0.18A
208V	N/A
240V	N/A
277V	N/A
Input Watts	5.2W

LED Info

Watts	5W
Color Temp	5000K (Cool)
Color Accuracy	68 CRI
L70 Lifespan	100,000 Hours
Lumens	213 lm
Efficacy	41 lm/W

Technical Specifications

Electrical

Drivers:
Constant current, Class 2, 100 - 240VAC, 50 - 60 Hz, 0.18 Amps.

Photocell:
120V Swivel photocell included. Photocell is only compatible with 120V.

Surge Protection:
1 KV

Compliance

UL Listed:
Suitable for wet locations in downlight position only. Suitable for mounting within 4ft (1.2m) of the ground.

IESNA LM-79 & LM-80 Testing:
RAB LED luminaires and LED components have been tested by an independent laboratory in accordance with IESNA LM-79 and LM-80.

ADA:
WPLEDR5 meets the requirements of the Americans with Disabilities Act (ADA)

Performance

Lifespan:
100,000-Hour LED lifespan based on IES LM-80 results and TM-21 calculations

Wattage Equivalency:
Equivalent to 13W CFL or 60W Incandescent

Other

Patents:
The WPLED design is protected by patents pending in the U.S., Canada, China, Taiwan and Mexico.

Warranty:
RAB warrants that our LED products will be free from defects in materials and workmanship for a period of five (5) years from the date of delivery to the end user, including coverage of light output, color stability, driver performance and fixture finish. RAB's warranty is subject to all terms and conditions found at rablighting.com/warranty.

Buy American Act Compliance:
RAB values USA manufacturing! Upon request, RAB may be able to manufacture this product to be compliant with the Buy American Act (BAA). Please contact customer service to request a quote for the product to be made BAA compliant.

LED Characteristics

LEDs:
5W, high-output, long-life LED

Color Temperature:
5000K

Color Consistency:
7-step MacAdam Ellipse binning to achieve consistent fixture-to-fixture color

Color Stability:
LED color temperature is warrantied to shift no more than 200K in color temperature over a 5-year period

Color Uniformity:
RAB's range of Correlated Color Temperature follows the guidelines of the American National Standard for Specifications for the Chromaticity of Solid State Lighting (SSL) Products, ANSI C78.377-2017.

Construction

Ambient Temperature:
Suitable for use in up to 40°C (104°F)

Cold Weather Starting:
The minimum starting temperature is -40°C (-40°F)

Thermal Management:
Integral cast aluminum mounting pad for optimum heat sinking to ensure cool operation with maximum LED life and light output

Housing:
Precision die-cast aluminum housing and mounting plate. 1 1/2" backbox with three 1/2" conduit entry points.

Copyright © 2024 RAB Lighting All Rights Reserved Note: Specifications are subject to change at any time without notice

Technical Specifications (continued)

Gaskets:
High-temperature silicone gaskets

Finish:
Formulated for high durability and long-lasting color

Green Technology:
Mercury and UV free. RoHS-compliant components.

Dimensions

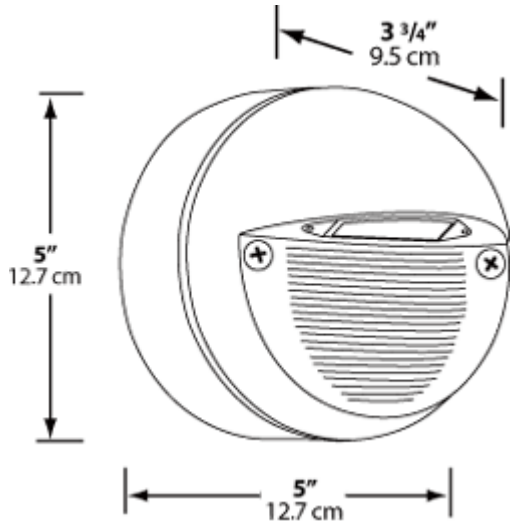

Features

- High performance LED light engine
- Maintains 70% of initial lumens at 100,000-hours
- Weatherproof high temperature silicone gaskets
- Superior heat sinking with die cast aluminum housing and external fins
- Replaces 13W CFL or 60W Incandescent
- 100 up to 240 Volts
- 5-Year, No-Compromise Warranty

Copyright © 2024 RAB Lighting All Rights Reserved Note: Specifications are subject to change at any time without notice