WPLED5™ INSTALLATION INSTRUCTIONS

Thank you for buying RAB lighting fixtures. Our goal is to design the best quality products to get the job done right. We'd like to hear your comments. Call the Marketing Department at 888-RAB-1000, or email: marketing@rabweb.com



IMPORTANT

READ CAREFULLY BEFORE INSTALLING FIXTURE. RETAIN THESE INSTRUCTIONS FOR FUTURE REFERENCE.
RAB fixtures must be wired in accordance with the National Electrical Code and all applicable local codes. Proper grounding is required for safety. THIS PRODUCT MUST BE INSTALLED IN ACCORDANCE WITH THE APPLICABLE INSTALLATION CODE BY A PERSON FAMILIAR WITH THE CONSTRUCTION AND OPERATION OF THE PRODUCT AND THE HAZARDS INVOLVED.

WARNING: Make certain power is OFF before installing or maintaining fixture. No user serviceable parts inside.

MOUNTING

CAUTION: Suitable for wet locations in downlight position only.

1. Orient the **Back box** for **Conduit** entry direction, if necessary.
2. Place **Wall Gasket** and mount **Back box.** Use suitable hardware for mounting the surface.
3. Rotate the **Adaptor Plate** such that **Adaptor Plate Screws** are at the either end of slot and the arrow showing **TOP** is facing up. For position of **Adaptor Plate** with reference to different **Conduit** position, see details in figure below.
4. Pull supply wires from back (or through **Conduit)** and wire fixture as shown in the wiring section. Fixture may hang from the tether while wiring.
5. Check **Housing Gasket.** It should remain firmly around the inside of the **Housing.**
6. Make sure all gaskets are properly seated. Align the holes on **Housing, Adaptor Plate and Back box**. Use the long **Housing Screws** provided with the kit to tighten the **Housing.**
7. If outdoor surface is irregular, use weatherproof silicone sealant to seal any gaps around the **Back box.** Plug the unused plugs.

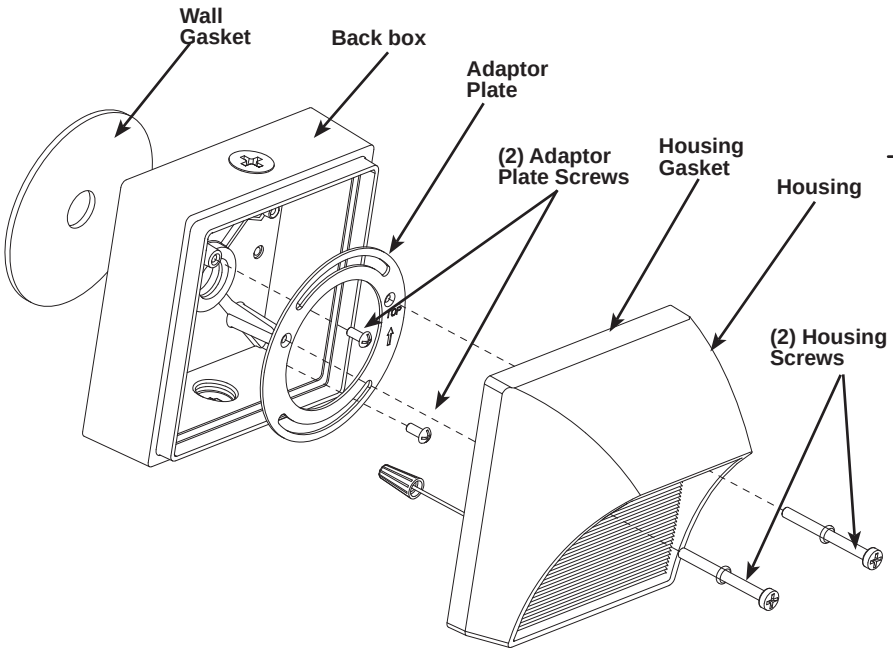

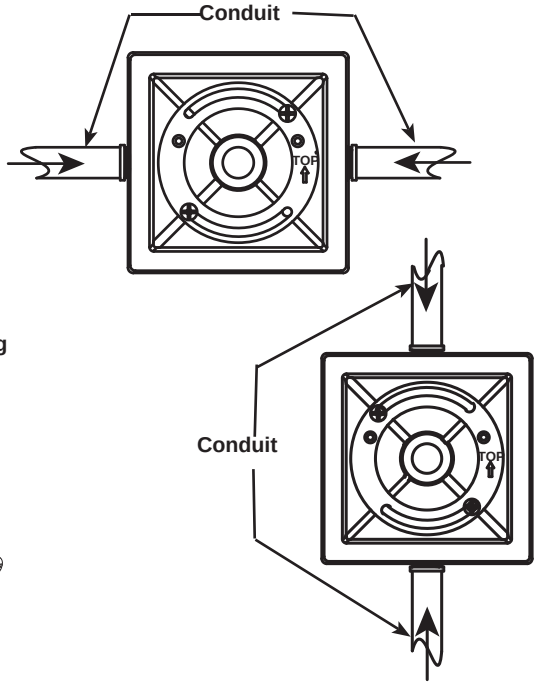

US pat. D612,975,CA Pat. pending, CN Pat. pending

WPLEDR5™ INSTALLATION INSTRUCTIONS

CLEANING & MAINTENANCE

CAUTION: Be sure fixture temperature is cool enough to touch. Do not clean or maintain while fixture is energized.

1. Clean glass lens with non-abrasive glass cleaning solution.
2. Do not remove LED lens to clean the LED. Do not touch the LED.

TROUBLESHOOTING

1. Check that the line voltage at fixture is correct. Refer to wiring directions.
2. Is the fixture grounded properly?
3. Is the photocell is functioning properly (if used)?

ACCESSORIES

Frosted Lens available with the Kit.

1. Loosen the two screws and remove the lens frame.
2. Replace clear lens with frosted lens.

CAUTION: Do not touch the LED.

WIRING

Universal voltage driver permits operation at 120V to 240V, 50 or 60 Hz..

1. Connect the black fixture lead to the (+) LINE supply lead.
2. Connect the white fixture lead to the (-) COMMON supply lead.
3. Connect the bare copper Ground wire from fixture to supply ground.

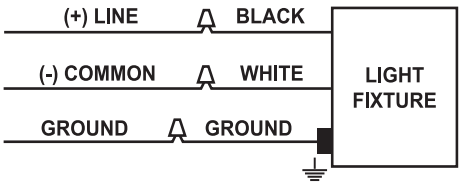

Note: These instructions do not cover all details or variations in equipment nor do they provide for every possible situation during installation, operation or maintenance.

WPLEDR5

RAB lighting facts® A Program of the U.S. DOE

Light Output (Lumens)	213
Watts	5.2
Lumens per Watt (Efficacy)	41
Color Accuracy — Color Rendering Index (CRI)	68
Light Color — Correlated Color Temperature (CCT)	4859 (Daylight)

Warm White | Bright White | Daylight

2700K 3000K 4500K 6500K

All results are according to IESNA LM-79-2008: *Approved Method for the Electrical and Photometric Testing of Solid-State Lighting.* The U.S. Department of Energy (DOE) verifies product test data and results.

Visit www.lightingfacts.com for the *Label Reference Guide*.

Registration Number: WVMA-JFJMCV
Model Number: WPLEDR5
Type: Outdoor wall pack

WPLEDR5N

RAB lighting facts® A Program of the U.S. DOE

Light Output (Lumens)	159
Watts	5
Lumens per Watt (Efficacy)	31
Color Accuracy — Color Rendering Index (CRI)	85
Light Color — Correlated Color Temperature (CCT)	4000 (Bright White)

Warm White | Bright White | Daylight

2700K 3000K 4500K 6500K

All results are according to IESNA LM-79-2008: *Approved Method for the Electrical and Photometric Testing of Solid-State Lighting.* The U.S. Department of Energy (DOE) verifies product test data and results.

Visit www.lightingfacts.com for the *Label Reference Guide*.

Registration Number: WVMA-1V6ZW5
Model Number: WPLEDR5N
Type: Outdoor wall pack

WPLEDR5Y

RAB lighting facts® A Program of the U.S. DOE

Light Output (Lumens)	133
Watts	5.3
Lumens per Watt (Efficacy)	25
Color Accuracy — Color Rendering Index (CRI)	88
Light Color — Correlated Color Temperature (CCT)	3031 (Bright White)

Warm White | Bright White | Daylight

2700K 3000K 4500K 6500K

All results are according to IESNA LM-79-2008: *Approved Method for the Electrical and Photometric Testing of Solid-State Lighting.* The U.S. Department of Energy (DOE) verifies product test data and results.

Visit www.lightingfacts.com for the *Label Reference Guide*.

Registration Number: WVMA-RPJ6ME
Model Number: WPLEDR5Y
Type: Outdoor wall pack

RAB LIGHTING
© 2011 RAB LIGHTING Inc.
Northvale, New Jersey 07647 USA
WPLEDR5-IN-0511

Easy Installation & Product Help

Tech Help Line	*Toll Free Fax*	*rabweb.com*	*e-mail*
Call our experts	Send a fax to RAB	Visit our website	Answered promptly
888 RAB-1000	888 RAB-1232	for product info	sales@rabweb.com

WPLED5™ INSTALLATION INSTRUCTIONS

CLEANING & MAINTENANCE

CAUTION: Be sure fixture temperature is cool enough to touch. Do not clean or maintain while fixture is energized.

1. Clean glass lens with non-abrasive glass cleaning solution.
2. Do not remove LED lens to clean the LED. Do not touch the LED.

TROUBLESHOOTING

1. Check that the line voltage at fixture is correct. Refer to wiring directions.
2. Is the fixture grounded properly?
3. Is the photocell is functioning properly (if used)?

ACCESSORIES

Frosted Lens available with the Kit.

1. Loosen the two screws and remove the lens frame.
2. Replace clear lens with frosted lens.

CAUTION: Do not touch the LED.

WIRING

Universal voltage driver permits operation at 120V to 240V, 50 or 60 Hz..

1. Connect the black fixture lead to the (+) LINE supply lead.
2. Connect the white fixture lead to the (-) COMMON supply lead.
3. Connect the bare copper Ground wire from fixture to supply ground.

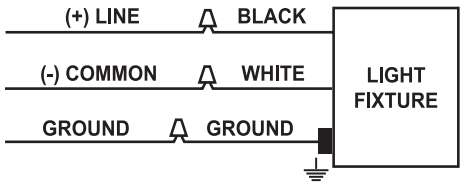

Note: These instructions do not cover all details or variations in equipment nor do they provide for every possible situation during installation, operation or maintenance.

WPLED5

RAB lighting facts®
A Program of the U.S. DOE

Light Output (Lumens)	196
Watts	5.3
Lumens per Watt (Efficacy)	37
Color Accuracy (Color Rendering Index (CRI))	68
Light Color (Correlated Color Temperature (CCT))	5054 (Daylight)

Warm White | Bright White | Daylight
2700K 3000K 4500K 6500K

All results are according to IESNA LM-79-2008: *Approved Method for the Electrical and Photometric Testing of Solid-State Lighting.* The U.S. Department of Energy (DOE) verifies product test data and results.

Visit www.lightingfacts.com for the *Label Reference Guide*.

Registration Number: WVMA-CS7XBN
Model Number: WPLED5
Type: Outdoor wall pack

WPLED5N

RAB lighting facts®
A Program of the U.S. DOE

Light Output (Lumens)	155
Watts	5
Lumens per Watt (Efficacy)	30
Color Accuracy (Color Rendering Index (CRI))	85
Light Color (Correlated Color Temperature (CCT))	4000 (Bright White)

Warm White | Bright White | Daylight
2700K 3000K 4500K 6500K

All results are according to IESNA LM-79-2008: *Approved Method for the Electrical and Photometric Testing of Solid-State Lighting.* The U.S. Department of Energy (DOE) verifies product test data and results.

Visit www.lightingfacts.com for the *Label Reference Guide*.

Registration Number: WVMA-GFE4FF
Model Number: WPLED5N
Type: Outdoor wall pack

WPLED5Y

RAB lighting facts®
A Program of the U.S. DOE

Light Output (Lumens)	128
Watts	5.3
Lumens per Watt (Efficacy)	24
Color Accuracy (Color Rendering Index (CRI))	88
Light Color (Correlated Color Temperature (CCT))	3088 (Bright White)

Warm White | Bright White | Daylight
2700K 3000K 4500K 6500K

All results are according to IESNA LM-79-2008: *Approved Method for the Electrical and Photometric Testing of Solid-State Lighting.* The U.S. Department of Energy (DOE) verifies product test data and results.

Visit www.lightingfacts.com for the *Label Reference Guide*.

Registration Number: WVMA-NYLTR5
Model Number: WPLED5Y
Type: Outdoor wall pack

RAB LIGHTING
© 2011 RAB LIGHTING Inc.
Northvale, New Jersey 07647 USA
WPLED5-IN-0511

Easy Installation & Product Help

Tech Help Line	*Toll Free Fax*	*rabweb.com*	*e-mail*
Call our experts	Send a fax to RAB	Visit our website	Answered promptly
888 RAB-1000	888 RAB-1232	for product info	sales@rabweb.com

WPLEDR5™ INSTALLATION INSTRUCTIONS

Thank you for buying RAB lighting fixtures. Our goal is to design the best quality products to get the job done right. We'd like to hear your comments. Call the Marketing Department at 888-RAB-1000, or email: marketing@rabweb.com



IMPORTANT

READ CAREFULLY BEFORE INSTALLING FIXTURE. RETAIN THESE INSTRUCTIONS FOR FUTURE REFERENCE.
RAB fixtures must be wired in accordance with the National Electrical Code and all applicable local codes. Proper grounding is required for safety. THIS PRODUCT MUST BE INSTALLED IN ACCORDANCE WITH THE APPLICABLE INSTALLATION CODE BY A PERSON FAMILIAR WITH THE CONSTRUCTION AND OPERATION OF THE PRODUCT AND THE HAZARDS INVOLVED.

WARNING: Make certain power is OFF before installing or maintaining fixture. No user serviceable parts inside.

MOUNTING

CAUTION: Suitable for wet locations in downlight position only.

1. Orient the **Back box** for **Conduit** entry direction, if necessary.
2. Place **Wall Gasket** and mount **Back box.** Use suitable hardware for mounting the surface.
3. Rotate the **Adaptor Plate** such that **Adaptor Plate Screws** are at the either end of slot and the arrow showing **TOP** is facing up. For position of **Adaptor Plate** with reference to different **Conduit** position, see details in figure below.
4. Pull supply wires from back (or through **Conduit)** and wire fixture as shown in the wiring section. Fixture may hang from the tether while wiring.
5. Check **Housing Gasket.** It should remain firmly around the inside of the **Housing.**
6. Make sure all gaskets are properly seated. Align the holes on **Housing, Adaptor Plate and Back box**. Use the long **Housing Screws** provided with the kit to tighten the **Housing.**
7. If outdoor surface is irregular, use weatherproof silicone sealant to seal any gaps around the **Back box.** Plug the unused plugs.

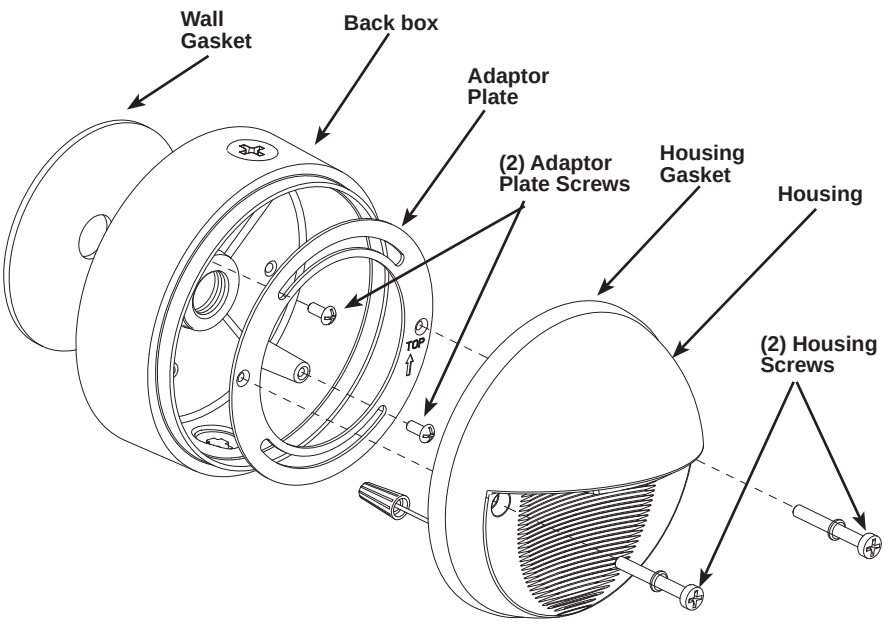

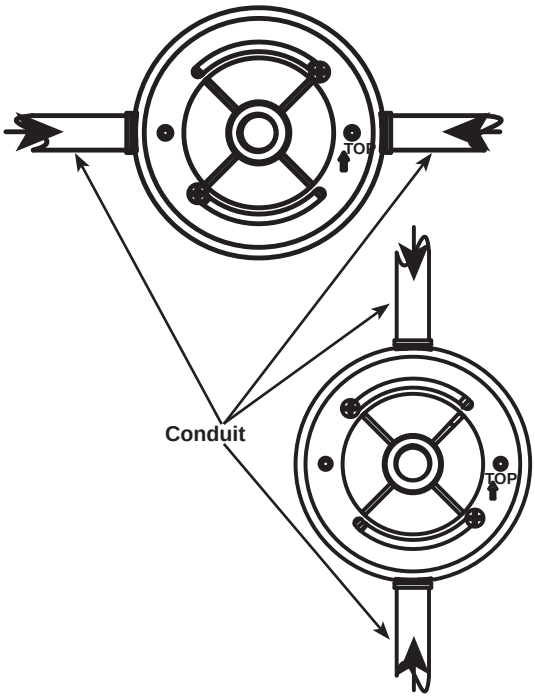

US pat. D612,974, CA Pat. pending, CN Pat. pending

WPLEDR5™ INSTALLATION INSTRUCTIONS

CLEANING & MAINTENANCE

CAUTION: Be sure fixture temperature is cool enough to touch. Do not clean or maintain while fixture is energized.

1. Clean glass lens with non-abrasive glass cleaning solution.
2. Do not remove LED lens to clean the LED. Do not touch the LED.

TROUBLESHOOTING

1. Check that the line voltage at fixture is correct. Refer to wiring directions.
2. Is the fixture grounded properly?
3. Is the photocell is functioning properly (if used)?

ACCESSORIES

Frosted Lens available with the Kit.

1. Loosen the two screws and remove the lens frame.
2. Replace clear lens with frosted lens.

CAUTION: Do not touch the LED.

WIRING

Universal voltage driver permits operation at 120V to 240V, 50 or 60 Hz..

1. Connect the black fixture lead to the (+) LINE supply lead.
2. Connect the white fixture lead to the (-) COMMON supply lead.
3. Connect the bare copper Ground wire from fixture to supply ground.

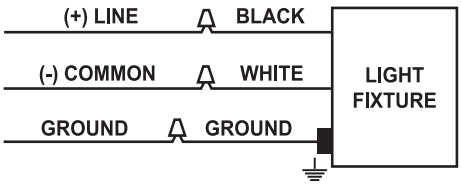

Note: These instructions do not cover all details or variations in equipment nor do they provide for every possible situation during installation, operation or maintenance.

WPLEDR5

RAB lighting facts® A Program of the U.S. DOE

Light Output (Lumens)	213
Watts	5.2
Lumens per Watt (Efficacy)	41
Color Accuracy — Color Rendering Index (CRI)	68
Light Color — Correlated Color Temperature (CCT)	4859 (Daylight)

Warm White | Bright White | Daylight

2700K 3000K 4500K 6500K

All results are according to IESNA LM-79-2008: *Approved Method for the Electrical and Photometric Testing of Solid-State Lighting.* The U.S. Department of Energy (DOE) verifies product test data and results.

Visit www.lightingfacts.com for the *Label Reference Guide*.

Registration Number: WVMA-JFJMCV
Model Number: WPLEDR5
Type: Outdoor wall pack

WPLEDR5N

RAB lighting facts® A Program of the U.S. DOE

Light Output (Lumens)	159
Watts	5
Lumens per Watt (Efficacy)	31
Color Accuracy — Color Rendering Index (CRI)	85
Light Color — Correlated Color Temperature (CCT)	4000 (Bright White)

Warm White | Bright White | Daylight

2700K 3000K 4500K 6500K

All results are according to IESNA LM-79-2008: *Approved Method for the Electrical and Photometric Testing of Solid-State Lighting.* The U.S. Department of Energy (DOE) verifies product test data and results.

Visit www.lightingfacts.com for the *Label Reference Guide*.

Registration Number: WVMA-1V6ZW5
Model Number: WPLEDR5N
Type: Outdoor wall pack

WPLEDR5Y

RAB lighting facts® A Program of the U.S. DOE

Light Output (Lumens)	133
Watts	5.3
Lumens per Watt (Efficacy)	25
Color Accuracy — Color Rendering Index (CRI)	88
Light Color — Correlated Color Temperature (CCT)	3031 (Bright White)

Warm White | Bright White | Daylight

2700K 3000K 4500K 6500K

All results are according to IESNA LM-79-2008: *Approved Method for the Electrical and Photometric Testing of Solid-State Lighting.* The U.S. Department of Energy (DOE) verifies product test data and results.

Visit www.lightingfacts.com for the *Label Reference Guide*.

Registration Number: WVMA-RPJ6ME
Model Number: WPLEDR5Y
Type: Outdoor wall pack

RAB LIGHTING
© 2011 RAB LIGHTING Inc.
Northvale, New Jersey 07647 USA
WPLEDR5-IN-0511

Easy Installation & Product Help

Tech Help Line	*Toll Free Fax*	*rabweb.com*	*e-mail*
Call our experts	Send a fax to RAB	Visit our website	Answered promptly
888 RAB-1000	888 RAB-1232	for product info	sales@rabweb.com