INSTRUCTIONS
WPTLED™ TALLPACK INSTALLATION

RAB Lighting is committed to creating high-quality, affordable, well-designed and energy-efficient LED lighting and controls that make it easy for electricians to install and end users to save energy. We'd love to hear your comments. Please call the Marketing Department at 888-RAB-1000 or email: marketing@rablighting.com



WPTLED

IMPORTANT

READ CAREFULLY BEFORE INSTALLING FIXTURE. RETAIN THESE INSTRUCTIONS FOR FUTURE REFERENCE.
RAB fixtures must be wired in accordance with the National Electrical Code and all applicable local codes. Proper grounding is required for safety. THIS PRODUCT MUST BE INSTALLED IN ACCORDANCE WITH THE APPLICABLE INSTALLATION CODE BY A PERSON FAMILIAR WITH THE CONSTRUCTION AND OPERATION OF THE PRODUCT AND THE HAZARDS INVOLVED.
WARNING: Make certain power is OFF before installing or maintaining fixture. No user servicable parts inside.
CAUTION: For proper weatherproof function all gaskets must be seated properly and all screws inserted and tightened firmly. Apply weatherproof silicone sealant around the edge of the Wall Box and/or Junction Box. This is especially important with an uneven wall surface. Silicone all plugs and unused conduit entries.

JUNCTION BOX/WALL MOUNTING

1. Loosen the **Bottom Screws** (*2*) and open the **Housing** (*as shown in **Fig. 1***).
2. Knock out appropriate slots in **Knockout Pattern**, secure to **Junction Box** *(not supplied)* with appropriate hardware. Check gasket is fully sealed. Feed supply wires through **Junction Box** into **Wall Mounting Box** through **Silicone Wiring Plug**.
3. Alternatively, secure **Wall Mounting Box** to a sturdy wall. Use appropriate mounting hardware such as lag bolts and anchors with washers suitable for the mounting surface. Use **Conduit Entries** and conduit connectors. Wire the fixture using UL listed wire connectors according to NEC and local codes.
4. Check the gasket is fully sealed. Silicone around the edge of **Wall Mounting Box** and/or **Junction Box**.
5. Place wired **Housing** over the **Wall Mounting Box**, close and tighten the **Bottom Screws**. Check **Door Gasket** is properly sealed.
6. Tighten **Plugs** and apply weatherproof silicone sealant to all unused **conduit entry** points. If outdoor surface is irregular, use caulk to seal any gaps around **Wall Mounting Box**.

Fig: 1

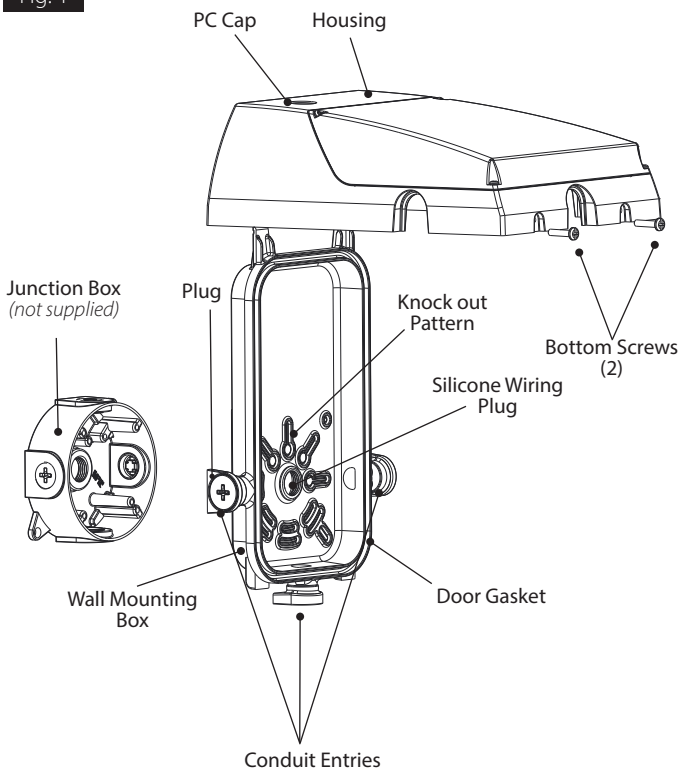

PHOTOCELL CAP

1. For photocell use, remove **PC Cap** (*as shown in **Fig. 1***).
2. For full time operation, cover Photocell with provided black silicone **PC Cap**.

INSTRUCTIONS
WPTLED™ TALLPACK INSTALLATION

RAB Lighting is committed to creating high-quality, affordable, well-designed and energy-efficient LED lighting and controls that make it easy for electricians to install and end users to save energy. We'd love to hear your comments. Please call the Marketing Department at 888-RAB-1000 or email: marketing@rablighting.com

0-10V DIMMABLE WIRING

Universal voltage 0-10V Dimming driver permits operation at 120V thru 277V, 50 or 60 Hz. Fixtures come standard with 120V thru 277V, 50/60Hz Photocell. For 0-10V Dimming, follow the wiring directions below (*as shown in **Fig. 2***).

1. For Junction Box Mount, feed wires through silicone wiring plug into the Wall Mounting Box.
2. Connect the black fixture lead to the **LINE** supply lead.
3. Connect the white fixture lead to the **COMMON** supply lead.
4. Connect the **GROUND** wire from fixture to supply ground.
5. Connect the purple fixture lead to the **(V+) DIM** lead.
6. Connect the pink (*or gray*) fixture lead to the **(V-) DIM** lead.
7. Cap the yellow fixture lead, if present. Do NOT connect.

Fig. 2

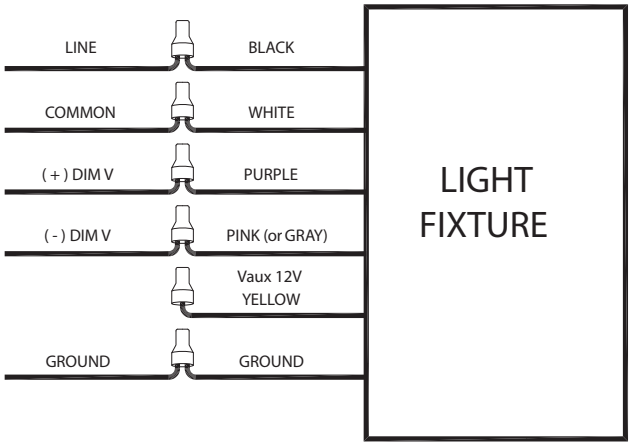

TROUBLESHOOTING

1. Check that the line voltage at fixture is correct. Refer to wiring directions.
2. Be sure the fixture is grounded properly.

CLEANING & MAINTENANCE

CAUTION: Be sure fixture temperature is cool enough to touch. Do not clean or maintain while fixture is energized.

1. Clean glass lens & fixture with non-abrasive glass cleaning solution.
2. Do not open fixture to clean the LED. Do not touch the LED.

© 2021 RAB LIGHTING Inc.

Easy Answers

rablighting.com
Visit our website for product info

Tech Help Line
Call our experts: 888 722-1000

e-mail
Answered promptly - sales@rablighting.com

Free Lighting Layouts
Answered online or by request

WPTLED-IN-0921
73368-RAB

RAB WARRANTY: *RAB's warranty is subject to all terms and conditions found at rablighting.com/warranty*