TABLE OF CONTENTS

Introduction 2
Drive Identification 3

Section I — Drive Installation

Outfitting 4
Installation 6
Lubrication 8
Start Up 8

Section II — Drive Service & Repair

Preventive Maintenance 9
Stored & Inactive Drives 9
Removal of Drive 9
Drive Disassembly 11
Identifying & Ordering Parts 13
Recommended Spare Parts 13
Parts List of Falk Part Numbers 15
Bearing Cross Reference Numbers 16
Seal Cross Reference Numbers 16

Section III — Drive Reassembly

Drive Reassembly 17-20

Appendix

Appendix A: Lubrication Recommendations 22-29
Appendix B: Backstop Installation 30-33
Appendix C: TA Removal Tool 34-35
Appendix D: Motor Mount Installation 36-37
Appendix E: Vertical Standpipe Installation 38-39
Appendix F: Modifications for Non-Standard Mounting Positions 40-41
Appendix G: Retaining Rings for Bushing Nuts and Thrust Plates & Tooth Combinations For Vibrations Analysis 42
Appendix H: Drive Shaft Recommendations for Tapered Drive Shafts 43
Appendix J: Drive Shaft Recommendations Using TA Taper® Bushing 44-45
Appendix K: Drive Shaft Recommendations Using (TCB) Kit 46-47
Appendix L: V-Belt Guard Installation 48-49
Appendix M: Electric Fan Installation 50-51
Appendix N: Reliability Package 52-53

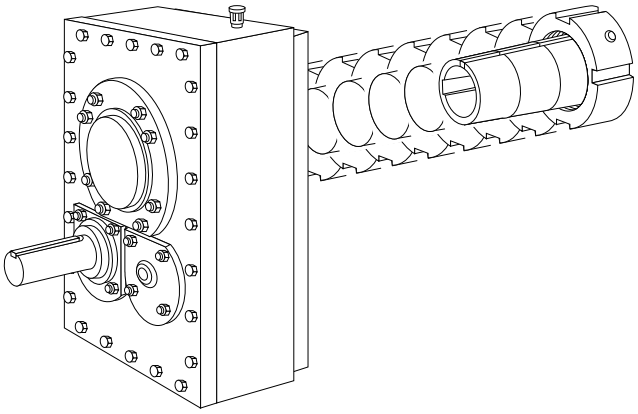

(PN-212395) **378-206**
February 2020 (Supersedes 01/2019)
© Rexnord Corporation. All Rights Reserved.

INTRODUCTION

WARRANTY — Rexnord (the "Company") warrants that Quadrive Shaft Mounted gear drives (I) conform to Company's published specifications, and (II) are free from defects of material for three years from the date of shipment.

Company does not warrant any non-Company branded products or components (manufacturer's warranty applies) or any defects in , damage to, or failure of products caused by: (I) dynamic vibrations imposed by the drive system in which such products are installed unless the nature of such vibrations has been defined and accepted in writing by Company as a condition of operation; (II) failure to provide suitable installation environment; (III) use for purposes other than those for which designed, or other abuse or misuse; (IV) unauthorized attachments, modifications or disassembly, or (V) mishandling during shipping.

WARNING: *Consult applicable local and national safety codes for proper guarding of rotating members. Lock out power source and remove all external loads from drive before servicing drive or accessories.*

CAUTION: *Do not weld the drive housing or accessories without prior approval from Rexnord. Welding on the drive may cause distortion of the housing or damage to the bearings and gear teeth. Welding without prior approval will void the warranty.*

DRIVE RATING — Operate the drive only within the horsepower and output speed for which it was selected and specified in Selection Guide 371-110 for the application. Refer to the nameplate for drive size, ratio and data.

FACTORY REPAIR AND REBUILD — Rexnord wants to continue to be your primary supplier, and we extend our service to you if your equipment is in the need of repair or replacement.

We are able to furnish a fast turnaround on both the quotation and rebuild. Nobody can do the job better than Rexnord. If you need repair on Rexnord products, just ask.

Contact your local Rexnord account executive or Rexnord distributor for more information.

© Rexnord Corporation. All Rights Reserved.
Rexnord
3001 W. Canal St., Milwaukee, WI 53208-4200 USA
Telephone: 414-342-3131 Fax: 414-937-4359 www.rexnord.com

Drive Identification

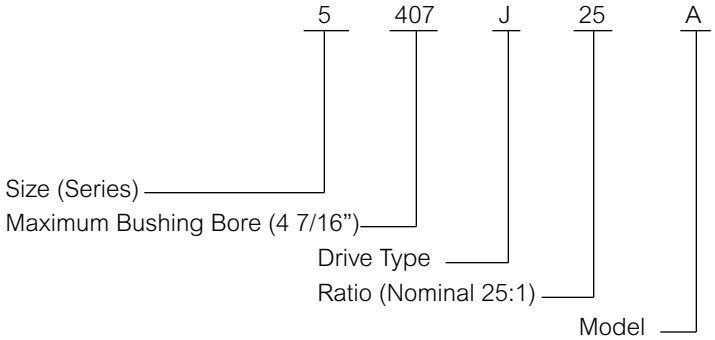

J is the basic drive identification. It can be furnished as a shaft-mounted drive JR; a flange mounted drive JF; or a screw conveyor drive JSC (size 5407 only), as illustrated below. These unique identifiers, JR, JF & JSC, are used throughout this manual to assist you in identifying the instructions which apply to your drive arrangement.

(JR) Shaft-Mounted Drive

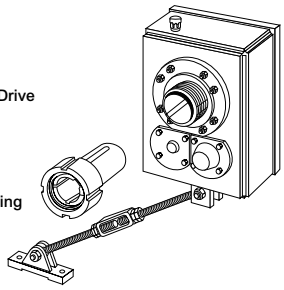

1) Drive
2) Torque Arm
3) TA Taper Bushing

(JF) Flange Mounted Drive

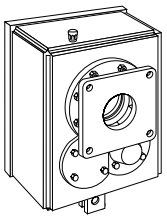

1) Drive With Flange
TA Taper Bushing Optional

(JSC) Screw Conveyor Drive (size 5407 only)

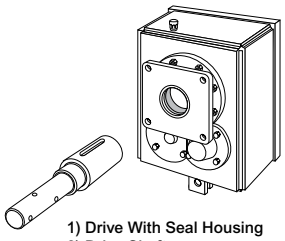

1) Drive With Seal Housing
2) Drive Shaft

+ Motor Mounts

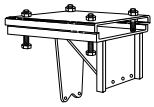

+ Backstops



+ Shaft Cooling Fans



+ Electric Cooling Fans

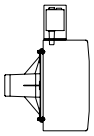

+ Vertical Standpipe

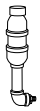

+ Trough Ends



+ Thrust Plate Kits



+ V-Belt Guards



+ TA Removal Tool

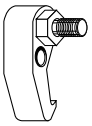

NOTE: Use a TA Taper bushing when mounting these drives on a straight driven shaft (hollow shaft is taper bored).

© Rexnord Corporation. All Rights Reserved.

Section I

DRIVE INSTALLATION

OUTFITTING

1. **JR, JF & JSC** — Find the desired mounting position in Figure 1 and install air vent and magnetic drain plug (packaged separately with drive). Also note and/or mark the oil level plug location OR in the case of a vertical mounting, refer to Appendix E, for installation of vertical stand pipe. If the mounting angle exceeds the limitations shown in Figure 1, refer to Appendix F, to determine modifications necessary within the limits illustrated therein. DO NOT fill drive with lubricant at this time.

Figure 1 HORIZONTAL DRIVES

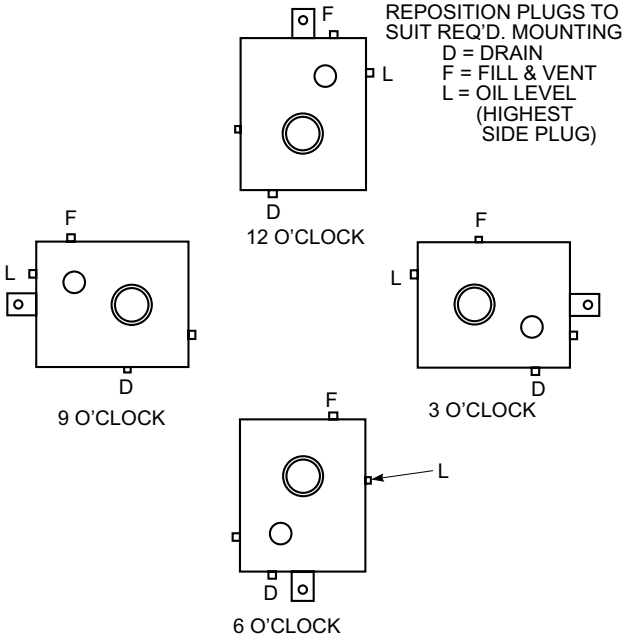

VERTICAL DRIVES

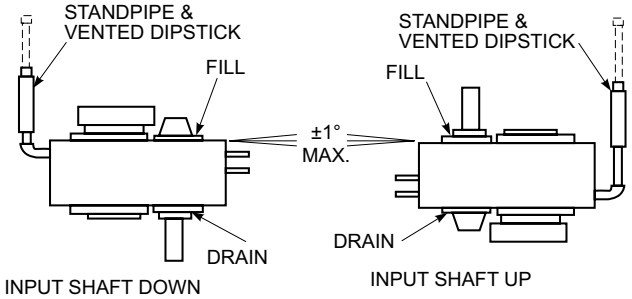

ANGULAR LIMITS FOR HORIZONTAL MOUNTING (ALL CLOCK POSITONS)

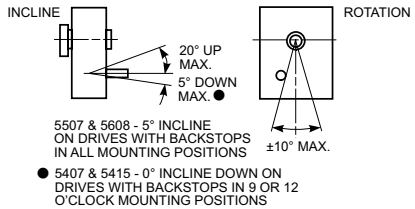

2. **JR** — The tapered bore hollow shaft is designed for use with a TA Taper bushing for mounting on a driven shaft with a straight outside diameter. Shaft tolerances for driven shafts are shown in Table 1. The minimum and maximum driven shaft engagements, dimension N in Figure 2, are shown in Table 2. The minimum engagement is necessary for full bushing engagement; the maximum engagement is only required if a thrust plate will be employed to remove the drive from the driven shaft (See Appendix C for preferred removal method).

Table 1 — Driven Shaft Tolerances ▲

Shaft Diameter — Inches		Max Undersize (Inches)
Over	Thru	
2.500	4.000	.006
4.000	6.000	.007
6.000	7.000	.008

▲ Millimeters - h10 tolerance.

Figure 2

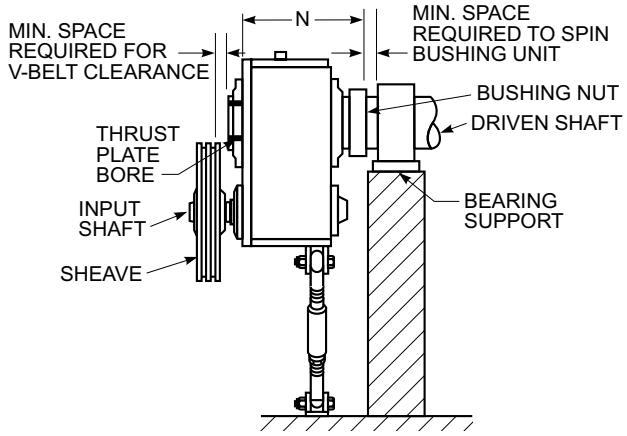

Table 2 — N Dimension ■

Drive Size	Minimum Inches (mm)	Maximum Inches (mm)
5407	8.38 (213)	12.40 (314)
5415	10.33 (263)	13.44 (341)
5507	10.66 (271)	14.53 (369)
5608	12.75 (324)	16.35 (415)

■ The minimum engagement is necessary for full bushing engagement; the maximum engagement is only if a thrust plate will be employed to remove the drive from the driven shaft.

© Rexnord Corporation. All Rights Reserved.
Rexnord
3001 W. Canal St., Milwaukee, WI 53208-4200 USA
Telephone: 414-342-3131 Fax: 414-937-4359 www.rexnord.com

a. **THIN WALL BUSHING** (with keyway slot through the bushing wall) — With the driven shaft keyway at the 12 o'clock position, slide bushing assembly onto the driven shaft, nut end first, and position the keyway slot over the shaft keyway. The bushing may have to be opened slightly to assist in installation. Insert a screwdriver into the slot in the bushing and very lightly pry open until the bushing slides onto the shaft. Insert the drive key furnished with the bushing into the shaft keyway. Proceed to Step 6.

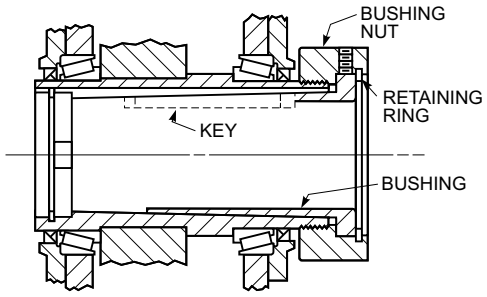

b. **THICK WALL BUSHING** (with separate internal and external keyways) — Insert the driven shaft key into the driven shaft keyway. If the driven shaft has an open-ended keyway, stake the keyway, Figure 3, to prevent axial dislocation of the shaft key under operating conditions. Slide the bushing assembly onto the driven shaft. The bushing may have to be opened slightly to assist in installation. Insert a screwdriver into the slot in the bushing and very lightly pry open until the bushing slides onto the shaft. Rotate the shaft so the external keyway in the bushing is at the 12 o'clock position. Insert the drive key, furnished with the bushing, into the keyway. Proceed to Step 6.

Figure 3

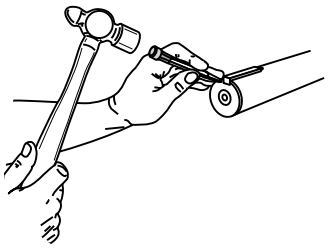

Figure 4

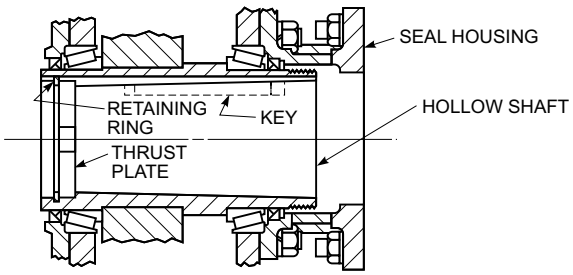

3. **JSC (5407 ONLY)** — Remove the output cover from the input side of the hollow shaft bore and save. Separate contents from the drive shaft kit. Install thrust plate and retaining ring in the hollow shaft, Figure 4. Insert key into drive shaft. Slide drive shaft thru the seal housing into the hollow shaft and insert the thrust plate fastener thru the thrust plate into the drive shaft. Tighten fastener to 792 lb-ft (1073 Nm). Reinstall hollow shaft cover. Continue outfitting based on the type of trough end seal to be installed: (a) Waste Packing Seal; or (b) Lip Seal.

a. **WASTE PACKING SEAL (Figure 5)** — Pack seal housing with waste packing and proceed to Step 4.

Figure 5

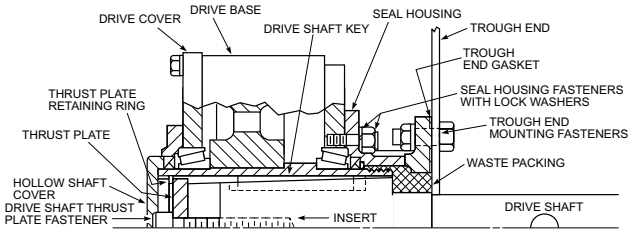

b. **LIP SEAL (Figure 6)** — Coat outside diameter of seal with Permatex #3 or equivalent. Coat the seal lips with bearing grease. Carefully slide seal over drive shaft extension taking care to not damage the seal lips. Drive seal into seal housing with the spring loaded seal lip toward the trough end side of the seal housing, flush with the seal housing. Proceed to Step 4.

Figure 6

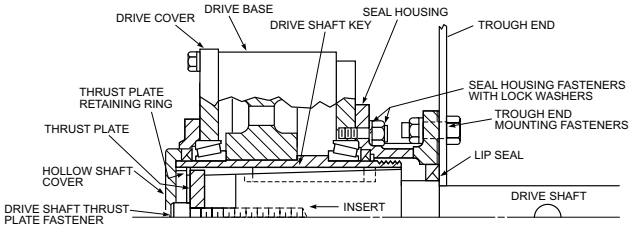

© Rexnord Corporation. All Rights Reserved.

4. **JSC** — Fasten the trough end to the seal housing using the hex head cap screws included in the drive shaft kit. Refer to Table 3 for torque value. Proceed to Step 6.

Table 3 — 5407JSC Trough End Fastener Size & Tightening Torque (Non-lubricated Fasteners)

Drive Shaft Diameter	3.000 & 3.437
Fastener Size	.750-10UNC
Tightening Torque, lb-ft (Nm)	245 (332)

5. **JF** — (NOTE: If the driven shaft has not been machined to Falk's taper bore specifications per Manual 377-140 and a straight shaft is to be utilized, refer to Manual 377-144 for instructions).

   Install backstop prior to installation of drive (refer to Appendix B). Installation of internal backstops NOT Factory-installed may require removal of mounting flange, Ref. #12. Remove cover from input end of hollow shaft bore and save. Install the thrust plate and retaining ring in the hollow shaft (refer to Figure 4). Proceed to Step 6.

INSTALLATION

6. **JR, JF & JSC** — Refer to Figure 7 for recommended lifting method. In order to sling JR & JF drives as illustrated, install the torque arm fastener in the torque arm anchor brackets. Sling the drive from the fastener as shown. For vertical installation, use (3) eyebolts as illustrated. Eyebolt sizes are 1/2" for 5407 thru 5507 and 3/4" for 5608. DO NOT remove sling until drive is secured to shaft. Before lifting the drive into position, rotate the high-speed shaft until the hollow shaft keyway will be in position to line-up with the driven shaft key. JF proceed to Step 11; JSC to Step 12.

Figure 7

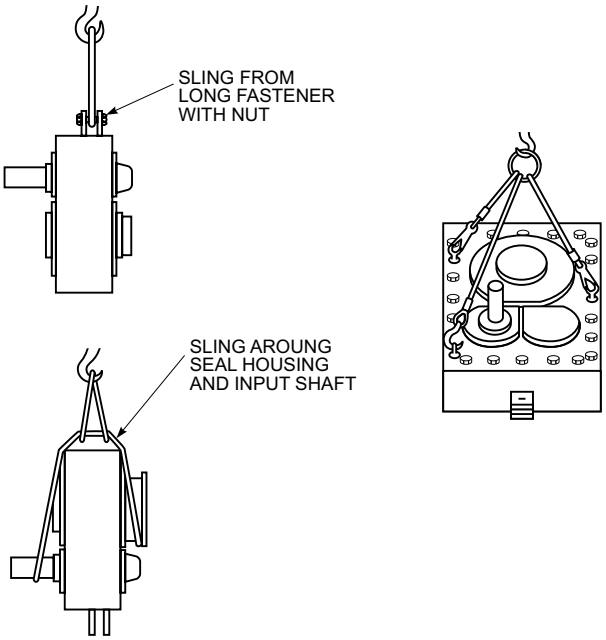

7. **JR** — If the drive was received with a backstop installed, the backstop must be temporarily removed to facilitate mounting. Refer to Section II, Step 10 for backstop removal instructions. Proceed to Step 8.
8. **JR** — Lift the drive into position and slide onto the drive shaft taking care that the driven shaft key seats into the hollow shaft keyway. DO NOT hammer or use excessive force. Refer to Figure 8 for installation of the torque arm. The exact position of the torque arm may vary within the range shown. For torque arm mountings other than shown, refer to Factory. If it is necessary to shorten the torque arm assembly, cut the excess from either tie rod end.

   The support to which the clevis bracket is to be fastened must sustain the torque reaction shown in Table 4. The maximum load reaction through the torque arm occurs when the torque arm is located in the extreme off angle position. Use Grade 5 fasteners to anchor the clevis bracket; refer to Table 5 for the fastener size and tightening torque.

   Bolt the torque arm to both the clevis bracket and the drive anchor bracket and tighten the bolts until seated against the brackets. DO NOT bend the bracket as clearance between the clevis brackets and tie rod is necessary.

Figure 8 — Torque Arm Mounting Positions
6 O'Clock Mounting Position Shown

Drive Size	A
5407-5507	30°
5608	25°

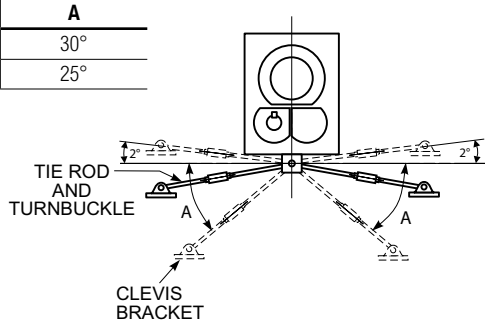

Table 4 — Load Reaction Through Tie Rod

Drive Size	5407	5415	5507	5608
Load ▲, lb	21840	26120	32940	40930
Load ▲, (N)	(97130)	(116170)	(146500)	(182060)

▲ Load includes moment due to motor and motor mount with torque arm at maximum angle.

Table 5 — Tie Rod Clevis Bracket Fastener Tightening Torque

Drive Size	Fastener ■ Size	Tightening Torque — lb-ft (Nm)	
		Steel Foundation	Concrete Foundation
5407	1.000-8UNC	567 (768)	467 (633)
5415	1.250-7UNC	1050 (1424)	867 (1175)
5507	1.250-7UNC	1050 (1424)	867 (1175)
5608	1.250-7UNC	1050 (1424)	867 (1175)

■ Grade 5 fasteners required.

© Rexnord Corporation. All Rights Reserved.
Rexnord
3001 W. Canal St., Milwaukee, WI 53208-4200 USA
Telephone: 414-342-3131 Fax: 414-937-4359 www.rexnord.com

9. **JR** — Thread the bushing nut onto the hollow shaft one to two turns.

   NOTE: The bushing nut threads have been coated with an anti-seize compound at the Factory. This compound should not be removed. Before re-installing a previously used nut, re-coat the nut threads only with an anti-seize compound.

   NOTE: In extremely severe or corrosive environments, additional anti-seize compound MUST be applied to the threads of the TA bushing nut.

   ***WARNING**: DO NOT apply anti-seize or lubricant to bushing or shaft surfaces. Use of anti-seize may prevent secure connection of the drive to the shaft and cause the drive to move.*

   ***WARNING**: Overtightening can fail the internal retaining ring. (See Appendix G, for listing of retaining rings).*

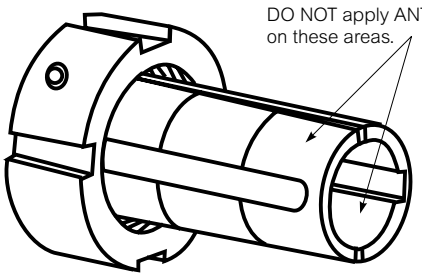

   a. **PREFERRED METHOD** — Use a spanner, chain or pipe wrench to tighten the bushing nut to the torque value indicated in Table 6. If the required torque cannot be measured, an approximation can be made using Table 6A. The full weight should be applied to the wrench handle in a horizontal position. For example, to achieve the required tightening torque for a 5415 bushing nut, a 180 lb person would have to apply all of his/her weight to a wrench handle 2.0 feet from the nut (an 80 kg person would have to apply all of his/her weight to a wrench handle 610 mm from the nut). Apply Loctite 243 or equivalent to threads of setscrews. Tighten the setscrew on the bushing nut to 19 lb-ft (26 Nm) torque.

   b. **ALTERNATE METHOD (TO BE USED WHEN EXACT TORQUE CAN NOT BE MEASURED)** — Use a spanner (Table 6), chain or pipe wrench to tighten the bushing nut just until the drive can no longer be moved by hand axially on the driven shaft. Loosen nut ONLY until it can be turned by hand but do not unseat the taper. Retighten the nut hand tight. Now mark a spot on the bushing nut. Next mark a spot on the driven shaft 180° from the first mark. Use the spanner wrench to tighten the nut until the two marks are aligned i.e., one half turn. Apply Loctite 243 or equivalent to threads of setscrews. Tighten the setscrew on the bushing nut to 19 lb-ft (26 Nm) torque.

10. **JR** — Install backstop, motor mount, motor, sheaves (mount sheaves as close to the drive and motor housing as possible), belts and guard. Refer to Appendix D for motor mount installation instructions. Proceed to Step 13.

11. **JF (USING TAPERED DRIVE SHAFT)** — Put key into the driven shaft. Lift drive into position and slide onto the driven shaft taking care that the driven shaft key seats into the hollow shaft keyway. DO NOT hammer or use excessive force. Secure the drive to the foundation with fasteners using torque values shown in Table 7. Next, secure the drive to the shaft with the thrust plate fastener. Refer to Table 8 for torque value. Reinstall the hollow shaft cover. Install motor mount, motor, sheaves, belts and guard. Refer to Appendix D for motor mount installation instructions. Proceed to Step 14.

Table 6 — Spanner Wrench Type & Spanner Nut Tightening Torque

Drive Size	Adjustable Hook Spanner Wrench		Spanner Nut Tightening Torque lb-ft (Nm)
	GearWrench	Williams	
5407 5415	81858 (6-1/8" to 8-3/4") 81858 (6-1/8" to 8-3/4")	474B 474B	333 (452) 333 (452)
	Ridgid Tool	Williams	
5507 5608	92685 ▲ (2" to 12") 92685 ▲ (2" to 12")	CT-15 ▲ CT-15 ▲	400 (542) 400 (542)

▲ These are chain wrenches where standard spanner wrenches are not available.

Table 6A — Equivalent Tightening Torque ♦

Drive Size	Required Torque lb-ft (Nm)	Person's Weight lbs (kg)	Length of Handle ft (mm)
5407	333 (452)	180-220 (80-100)	2.0-1.5 (610-460)
5415	333 (452)	180-220 (80-100)	2.0-1.5 (610-460)
5507	400 (542)	180-220 (80-100)	2.25-2.0 (685-610)
5608	400 (542)	180-220 (80-100)	2.25-2.0 (685-610)

♦ If a torque wrench is not available, the torque can be approximated by applying the given weight to the hook or spanner wrench handle at the given distance from the nut.

Table 7 — JF & JSC Drives – Foundation Fastener & Tightening Torques

(Non-Lubricated Fasteners)

Drive Size	Fastener Size & Grade	Torque lb-ft (Nm)
5407	.750-10UNC, Gr. 5	245 (323)
5415	1.250-7UNC, Gr. 5	1050 (1424)
5507	1.250-7UNC, Gr. 5	1050 (1424)
5608	1.500-6UNC, Gr. 5	1842 (2497)

Table 8 — Thrust Plate Fastener Data

(Non-Lubricated Fasteners)

Drive Size	Fastener Size & Grade ■	Torque lb-ft (Nm)	Minimum Thread Depth-Inches (mm)
5407	1.000-8UNC x 4.00, Gr. 8	792 (1073)	2.75 (69.8)
5415	1.250-7UNC x 4.00, Gr. 8	1596 (2164)	2.50 (63.5)
5507	1.250-7UNC x 4.00, Gr. 8	1596 (2164)	2.50 (63.5)
5608	1.250-7UNC x 4.00, Gr. 8	1596 (2164)	3.00 (76.2)

■ Fastener lengths given are for applications using tapered drive shafts. Other lengths may be needed for applications using tapered bushings.

© Rexnord Corporation. All Rights Reserved.

12. **JSC (5407 ONLY)** — Assemble drive to trough and install drive shaft coupling bolts per screw conveyor manufacturer's instructions. Install motor mount, motor, sheaves, belts and guard. Refer to Appendix D for motor mount installation instructions. Proceed to Step 14.
13. **JR** — When the torque arm turnbuckle is used for belt tension adjustment, position the motor so that the belt pull will be about 90° to a line through the drive input shaft and hollow shaft as shown in Figure 9. For drives where the motor is moved to adjust belt tension, mount the motor slide base so that the belt tension adjustment is approximately parallel to the belt centers. Refer to Appendix D, for instructions relative to alignment of sheaves and belts. Proceed to Step 14.

Figure 9

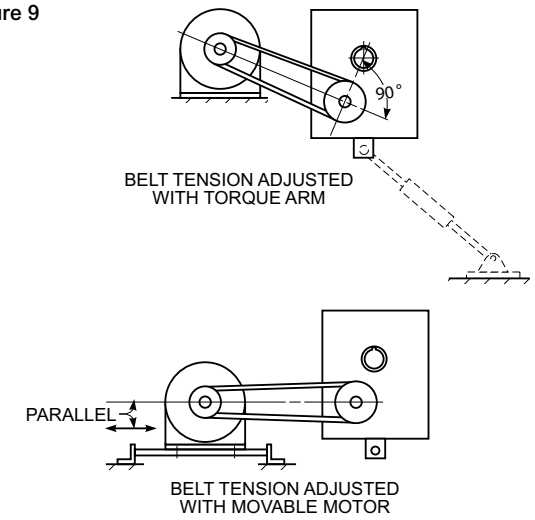

LUBRICATION

***CAUTION**: DRIVES SHIPPED WITHOUT OIL.*

14. **JR, JF & JSC** — Refer to Appendix A for selection of lubricant. Refer to Table 9 for approximate oil capacity of drives.
15. **JR, JF & JSC** — (HORIZONTAL MOUNTING)

    Remove air vent and oil level plug (Refer to Step 1). Fill the drive until oil shows in the oil level hole. Coat the air vent and plug threads with Permatex #3 or equivalent thread sealant before replacing.

    JRV, JFV & JSCV — (VERTICAL MOUNTING) Refer to Figure 1, Step 1.

    Remove the fill plug and fill with oil to level marked on the dipstick.

    Coat the plug threads with Permatex #3 or equivalent thread sealant before replacing.

    If stand pipe is used as oil fill, the intermediate cover plug must be removed to eliminate entrapped air.
16. **JR, JF & JSC** — Where applicable, **WITH A HAND GREASE GUN**, pump grease into the input seal cover, Figure 10, until the grease appears at the shaft. Wipe off excess grease from the shaft. DO NOT use grease where it could contaminate the product e.g., foods, drugs etc.

Figure 10

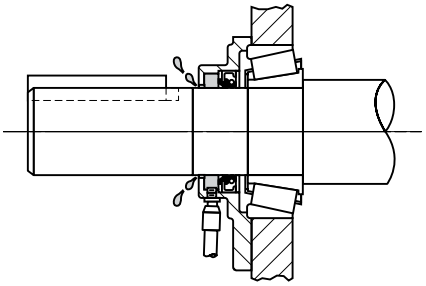

START UP

17. **JR, JF & JSC** — Before operating the drive, check for any fasteners, pipe plugs, air vent, etc. which may have been loosened in the course of outfitting, installing and lubricating the drive, to be sure that they have been properly retightened. Check correct rotation of motor & backstop and be sure drive is properly lubricated. After one week of operation repeat check of all external fasteners and pipe plugs.
18. After one month of operation:
    a. Operate the drive until the sump oil reaches normal operating temperature. Shut the drive down and drain immediately.
    b. Immediately flush the drive with an oil of the same type and viscosity grade as the original charge (warmed to approximately 100°F (38°C) in cold weather). Rapidly pour or pump a charge equal to 25-100% of the initial fill thru the drive, or until clean oil flows thru the drain.
    c. Close the drain and refill the drive to the correct level with new oil of the correct type and viscosity.

Table 9 — Approximate Oil Capacity ▲

Drive Size	JR, JF & JSC Gallons (Liters)	JRV & JFV Gallons (Liters)
5407	4.3 (16.3)	6.3 (23.8)
5415	7.0 (26.5)	9.5 (36.0)
5507	10.3 (39.0)	13.3 (50.3)
5608	12.0 (45.4)	19.5 (73.9)

▲ Quantities are approximate. Always fill drive to specified level.

© Rexnord Corporation. All Rights Reserved.
Rexnord
3001 W. Canal St., Milwaukee, WI 53208-4200 USA
Telephone: 414-342-3131 Fax: 414-937-4359 www.rexnord.com

Section II

DRIVE SERVICE & REPAIR

PREVENTIVE MAINTENANCE

PERIODICALLY — Carefully check the oil level of the drive when it is stopped and at ambient temperature, add oil if needed. If the oil level is above the specified level, have the oil analyzed for water content. Moisture in the oil may indicate seal leakage or condensation. If so, correct the defect immediately and change the oil. DO NOT overfill or oil leakage may result. On vertical shaft drives, remove fill plug before filling or checking oil level. If a drive is equipped with a fan, periodically clean accumulated foreign matter from the fan and fan guard to allow adequate air flow.

GREASE PURGED SEALS — Periodically (at least every six months), depending upon the frequency and degree of contamination, purge contaminated grease by slowly pumping fresh bearing grease through the seal cage WITH A HAND GREASE GUN until fresh grease flows out along the shaft. Wipe off the purged grease. Refer to Appendix A.

OIL CHANGES

Refer to the Lubrication Recommendations Section in Appendix A.

STORED & INACTIVE GEAR DRIVES

Each drive is protected with a rust preventive that will protect parts against rust for a period of 4 months in an outdoor shelter or 12 months in a dry building after shipment from the Factory.

If a gear drive is to be stored, or is inactive after installation beyond the above periods, add Nox-Rust VCI-10 ▲ vapor-phase rust inhibitor. For drives that have oil installed, add Nox-Rust VCI-10 vaper-phase rust inhibitor at the rate of 2% of sump capacity. For drives without oil, add Nox-Rust VCI-10 vapor-phase rust inhibitor at the rate of one ounce per cubic foot of internal drive space. Rotate the shafts several times by hand. Before operating, drives which have been stored or inactive must be filled to the proper level with oil meeting the specifications given in this manual. Refer to Manual 128-014 for "Start-up after Storage" instructions.

▲ Product of the Daubert Chemical Company, Chicago, Illinois.

Periodically inspect stored or inactive gear drives and add Nox-Rust VCI-10 every six months, or more often if necessary. Indoor dry storage is recommended.

The air breather should be replaced with a plug (air breather should be attached to gear drive for future use) so that the protective rust inhibiting atmosphere is sealed inside the drive. Install air breather when preparing drive for operation.

***WARNING**: The rust preventative oil from the factory and Nox-Rust VCI-10 are not H1 registered with the NSF (National Sanitation Foundation) as suitable for food processing applications. When Food Grade Lubricants are to be used, it is the end users responsibility to properly flush and prepare the drive for Food Grade service. Contact the lubricant manufacturer for specific information and flushing procedures.*

REPAIR & REPLACEMENT

***WARNING**: Consult applicable local and national safety codes for proper guarding of rotating members. Lock out power source and remove all external loads from drive before servicing drive or accessories.*

NOTE: Only the seals on the input side (See Figure 12) of 5407-5507 drives and high-speed shaft seals of the 5608 drive can be replaced without removing the drive from the driven equipment. All other repairs require removal of the drive from the driven equipment. Proceed to Step 1 for drive removal. Proceed to Step 5 for replacement of seals.

REMOVAL OF DRIVE

See note above if only seal replacement is intended.

1. **JR, JF & JSC** — Drain the lubricant at this time. Remove safety guards and belts (motor and motor mount, optional). Remove backstop. Refer to Section **II**, Step 10, for backstop removal instructions.

   ***WARNING**: Drive must be supported during removal process. Use a sling around the motor mount or as recommended in Section **I**, Step 6. Take up the slack in the sling before proceeding.*

© Rexnord Corporation. All Rights Reserved.

2. **JR** — Refer to Appendix C, for instructions for using the TA torque assist removal tool.

   ALTERNATE METHOD — Loosen the setscrew on the bushing nut which is located at the output end of the hollow shaft. Use a spanner, pipe or chain wrench to loosen the bushing nut (Section I, Table 6). Initially, the nut will freely rotate counter clockwise approximately 180° as the nut moves from the locked position to the removal position. At this point anticipate resistance which indicates unseating of the bushing. Continue to turn the nut until it is free from the hollow shaft. Prepare drive for lifting (Figure 7) by disconnecting the torque arm at the drive end. Slide the drive from the bushing. The bushing can be left in place or removed, as required. If bushing will not slide off of the shaft, insert a small prybar into the split of the bushing and pry the split open slightly to loosen the bushing and remove from the shaft. Proceed to Step 5 for replacement of seals only or Step 9 for drive disassembly procedure.

3. **JF** — Remove the hollow shaft cover, Ref. #14 (Figure 12), from the input end of the hollow shaft. Remove the bolts which fasten the mounting flange to the driven equipment.

   Remove the fastener, retaining ring, and thrust plate from the hollow shaft. Refer to Table 10 and select a backing bolt and flat washer and install them into the drive shaft as illustrated in Figure 11. The bolt head provides a working surface for the removal bolt. Reinsert the thrust plate and retaining ring into the hollow shaft and select a removal bolt from Table 10. Thread the removal bolt into the thrust plate until it contacts the backing bolt head. Torque the removal bolt to the value shown in Table 10. (If the thrust plate rotates in the shaft, align the slot in the plate with the hollow shaft keyway and insert a screw driver or piece of key stock to prevent rotation of the plate.) After torquing the bolt, as instructed, strike the bolt, sharply with a hammer and retorque the bolt if separation of the drive from the shaft did not occur. Repeat this procedure, retorquing the bolt after each blow, until separation occurs.

Table 10 — Removal & Backing Bolt Size and Length

Drive Size	Removal Bolt Size & Minimum Length – Inches	Maximum Tightening Torque – lb-ft (Nm)	Backing Bolt Size & Maximum Length – Inches
5407	1.125-7UNC x 3.00	742 (1006)	1.000-8UNC x 2.75
5415	1.500-6UNC x 3.75	1842 (2497)	1.250-7UNC x 2.50
5507	1.500-6UNC x 3.75	1842 (2497)	1.250-7UNC x 2.50
5608	1.500-6UNC x 3.75	1842 (2497)	1.250-7UNC x 3.00

Figure 11

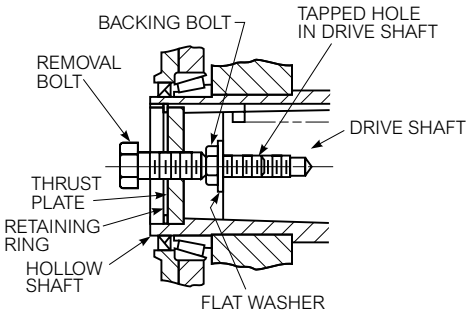

***CAUTION**: Failure to follow this procedure may result in the destruction the threads in the thrust plate. (If the retaining ring becomes damaged, refer to Appendix G, for replacement information.)*

Proceed to Step 5 for replacement of seals only OR Step 9 for drive disassembly procedure.

4. **JSC (5407 ONLY)** — Remove drive from driven equipment trough end by removing the trough end mounting screws from seal housing. Remove coupling bolts from drive shaft and slide drive with drive shaft away from the driven equipment.

   To remove drive shaft from the drive, remove the hollow shaft cover, Ref. #14 (Figure 12), from the input end of the hollow shaft and then refer to Step 3 above. The procedure to separate the JSC drive from the shaft is the same as for separation of a JF drive from driven equipment shaft.

   After separation of the drive and shaft has been achieved, determine the type of seal equipped in the seal housing. If it is a waste packing seal, remove the waste packing material and then remove the loosened drive shaft from the seal housing side of the drive. If equipped with a lip seal, first remove the lip seal following the removal instructions from Step 5. After seal is removed from seal housing, remove the loosened drive shaft from the seal housing side of the drive.

   CAUTION: *The seal housing acts as the bearing cage, therefore, DO NOT remove from the drive unless complete drive disassembly is anticipated. Removal of the seal housing will require readjustment of the L.S. bearings, Section **III**.*

© Rexnord Corporation. All Rights Reserved.
Rexnord
3001 W. Canal St., Milwaukee, WI 53208-4200 USA
Telephone: 414-342-3131 Fax: 414-937-4359 www.rexnord.com

DRIVE DISASSEMBLY — (Refer to Parts Drawing Figure 14)

Prior to initiating any disassembly or repair, clean accumulated dirt and grime from the surface of the drive housing. Clean the exposed portion of the high-speed and hollow shafts with a solvent and a non-abrasive cloth. If the seals only are being replaced proceed to Step 5. If the drive will be disassembled for inspection or repair, skip to Step 9.

***CAUTION**: Do not damage shaft; new seals will leak if seal contacting surface is marred. Do not use abrasive material on shaft seal contacting surface.*

Figure 12

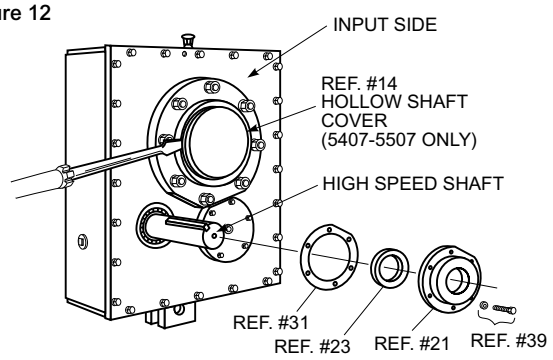

5. **SEAL REMOVAL** — (When drive is to be disassembled, proceed to Step 9) Seal replacement is recommended after seal removal. When removing seals, maintain shafts in a horizontal plane to prevent any foreign matter from falling into the bearings. Refer to Figures 12, 13 & 14.

   NOTE: Only seals on the input side (See Figure 12) of 5407-5507 drives and high-speed shaft seals of the 5608 drive can be replaced if gear drive is mounted on driven equipment. If gear drive removal is necessary, proceed to Step 1 for removal instructions.

   If drive removal is not necessary, drain lubricant at this time.

   Depending upon seal(s) being replaced, remove v-belt guard, v-belts, high-speed shaft sheave, shaft cooling fan (if so equipped), backstop (5507 & 5608J only, if so equipped) and other accessories as necessary.

   a. Two seal mounting arrangements are used as follows:

      Seals are installed into seal cages where seal cage must be removed from drive to remove seals. Removal of these seal cages will require readjustment of the bearings. The following seals use this mounting arrangement:

      5407-5507; All types, H.S. seals.
      5407JF & JSC; L.S. seals (output side).
      5608; All types, H.S. & L.S. seals.

      Refer to Figures 12, 13 & 14 and remove seals with this mounting arrangement as follows:

      (1) Clean shaft extension with solvent and remove all sharp edges. Remove seal cage, Ref. #11, #12, #21 or #66.

      (2) Drive out old seal from seal cage.

      (3) Scrape old Permatex from bore exercising caution not to score the bore.

   b. Seals are installed into seal cages where seal cage may remain attached to drive. The following seals use this mounting arrangement:

      5407 JF & JSC; L.S. seals (input side).
      5407-5507JR; L.S. seals (input & output sides).
      5415-5507JF; L.S. seals (input & output sides).

      Refer to Figures 12, 13 & 14. Remove the hollow shaft cover, Ref. #14, on Sizes 5407-5507. Remove seals with this mounting arrangement as follows:

      (1) Clean shaft extension with solvent and remove all sharp edges. Use a sharp center punch to lightly punch the seal case as a guide for the drill. NOTE: DO NOT drive seal into the bore too deep. Seals are not axially retained and disassembly of the drive may be required if the seal is driven too deep.

      (2) Wrap several turns of tape around a .125" (3 mm) diameter drill bit approximately .25" (6 mm) from the drill point to prevent the drill bit from entering too deeply into the housing and damaging the bearing. Grease or magnetize the drill bit to help retain the chips. Drill two .125" (3 mm) diameter holes in the seal case 180° apart. Control the angle of the drill as illustrated in Figure 13 to prevent damage to the shaft.

      (3) Insert two #10-.750" (M5 x 20) sheet metal screws into the seal case leaving .5" (13 mm) of the screw protruding above the seal face. DO NOT drive the screw more than .25" (6 mm) beyond seal face or bearing damage may occur. Use a claw type pry bar under the screw head as shown in Figure 13 and lift the seal out. Remove all metal chips. Use a magnet to remove the metal chips that fall into the bore. Flush the drive to remove metal chips from the bearing. Remove Permatex from the housing bore.

Figure 13

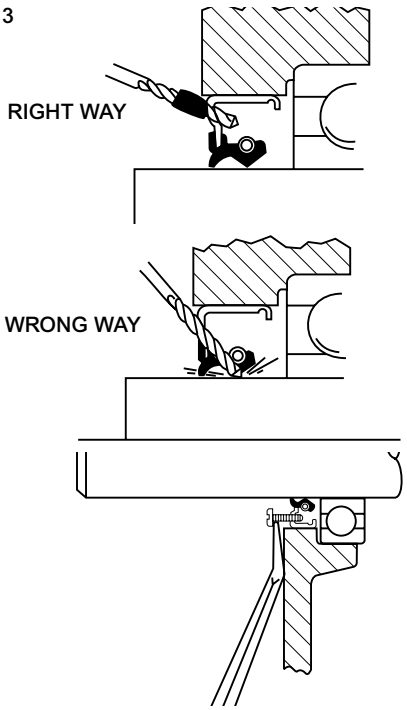

© Rexnord Corporation. All Rights Reserved.

6. **SEAL SURFACE CONDITION** — Carefully inspect polished surface of shaft where the seal makes contact. If the seal surface shows any sign of a nick, scratch, spiral swirl or groove, the shaft should be replaced or refurbished to prevent leakage of the lubricant. (In many instances the seal surface can be restored by use of a thin wall wear sleeve. Check with your local seal supplier and follow the manufacturer's instructions for installing the wear sleeve.)
7. **SEAL INSTALLATION**

   ***CAUTION**: Protect seal lips from sharp edges of the keyway by wrapping thin strong paper (Kraft paper) around the shaft and coating the paper and seal lips with grease before sliding the seal on or off the shaft. Do not expand the seal lips more than .030" (0,75 mm) diameter.*

   a. Install seals into seal cages where cages must be removed from drive:

      5407-5507; All types, H.S. seals.
      5407 JF & JSC; L.S. seals (output side).
      5608; All types, H.S. & L.S. seals.

      Shim-gaskets are used behind seal cages and end covers to adjust bearings. The correct shim-gasket pack must be determined prior to seal installation to attain proper bearing adjustment.

      Proceed to Section **III**, Step 3 for instructions regarding output side seal cages. Proceed to Section **III**, Step 5f for instructions regarding input side seal cages. Proceed to Section **III**, Step 6, bearing adjustment instructions, to determine the proper shim-gasket pack thickness.

      Remove seal cage and install seal as follows:

      Note: When removing a seal cage to install a seal, be sure to use the shim-gasket pack determined from above to assure correct bearing adjustment.

      Coat O.D. of seal with Permatex #3 or equivalent sealant. Position seal squarely in seal cage with spring-loaded lip toward drive. Drive or press seal into cage using a flat faced tool until seated.

      Install the complete seal cage shim pack. Carefully slip seal cage with seal over the shaft. Replace fasteners and cross tighten to torques listed in Table 14, Section **III**.

   b. Install seals into seal bores where seal cages may remain attached to housing:

      5407 JF & JSC; L.S. seals (input side).
      5407-5507JR; L.S. seals (input & output sides).
      5415-5507JF; L.S. seals (input & output sides).

      Coat O.D. of seal with Permatex #3 or equivalent sealant. Carefully slip seal over shaft and position squarely in seal bore with spring-loaded lip toward drive. Use a cylindrical square faced tool to drive or press seal into bore until outer seal wall is seated 0.14" (3.5 mm) inside the seal bore outer wall.

      ***CAUTION**: DO NOT seat seal against bearing; a shoulder is NOT provided for stopping the seal. Measure seal axial runout with a dial indicator mounted on the shaft. If the seal axial runout is more than 0.010" (0.25 mm), tap high side of seal with installation tool until seal axial runout is 0.010" (0.25 mm) or less.*

8. **DRIVE REPAIR IS COMPLETE** — Review instructions in Section **I** for drive installation.

DRIVE DISASSEMBLY — CONTINUED

9. When seals, Ref. #22 & 23 are to be reused (replacement is recommended), wrap the high-speed shaft keyway and hollow shaft threads with masking tape or light weight kraft paper to protect seal lips during disassembly. Cover wrapping with a light coat of grease.
10. Remove backstop parts if so equipped. (For all drives, note direction of rotation of high-speed shaft for proper reassembly.)

    For sizes 5407 & 5415J14 remove cover Ref. #19, backstop Ref. #5A and appropriate spacers from backstop cage. Re-install cage and cover without the backstop and finger tighten fasteners.

    For size 5415J25, remove entire backstop cage. Disassemble retaining rings and remove backstop. Re-install cage and cover without the backstop and finger tighten fasteners.

    For sizes 5507 & 5608, remove retaining ring and slide backstop Ref. #5A off of shaft.
11. Lay drive on bench with high speed shaft up. Remove housing cover fasteners, Ref. #33. Tighten the dowel nuts to remove the dowels. Screw cap screws into tapped holes (5/8-11UNC, sizes 5407-5507; 7/8-9UNC, size 5608). Tighten cap screws until the seal between the cover plate and base is completely broken. Screw eyebolts into tapped holes diagonally opposite in cover plate. Attach hoist cables and lift cover plate off housing base.
12. Remove the shaft assemblies (J05, Ref. #3A & 4A; J14 or J25, Ref. #1A, 2A & 4A) from output housing, Ref. #10.
13. Turn housing on either narrow side. If tapered roller bearings are being replaced, remove end covers and seal cage from output side of drive and drive bearing cups through the bores. Remove bearing cups from the housing cover in the same manner.
14. Drive seals out from base and cover bores and seal cages if replacement is indicated. Remove gasket material, seal compound and any accumulated foreign matter from seal joints, bores and adjacent sealing surfaces. Use a solvent to clean out the housing covers and shaft assemblies.
15. If drive is equipped with an internal backstop, check the shaft surface and the backstop sprags (inside diameter) for signs of wear. If either component shows evidence of wear, both should be replaced (Assemblies Ref. #1A or 3A and 5A). Also refer to Step 6 for inspection of seal surfaces.

© Rexnord Corporation. All Rights Reserved.
Rexnord
3001 W. Canal St., Milwaukee, WI 53208-4200 USA
Telephone: 414-342-3131 Fax: 414-937-4359 www.rexnord.com

16. Inspect gear teeth for wear or indications of fatigue; e.g., hairline cracks at the root of the tooth. If one element has undergone severe wear or broken teeth, replace the mating element also.
17. Clean and inspect bearings for wear. Lubricate with light oil before spinning to avoid scoring of working surfaces. Remove any worn bearings with a wheel puller. If tapered roller bearings are being replaced, replace the bearing cups. DO NOT use new cone assemblies with worn (old) cups.
18. If gears are to be replaced, use a wheel puller or press to remove gears Ref. #1A4 or 4A4 from their shaft. Exercise caution to avoid scoring shaft seal diameter with the keyway in the gear.
19. Inspect all fasteners for damage or wear and replace with fasteners of equal grade. Grade 5 fasteners have three (3) radial lines on the head. Fasteners are available in kit form, Ref. #80.



20. If the shaft assemblies can be reused intact (no new parts required), refer to Section III, Steps 5 thru 8, for reassembly procedure. Replace all shim-gaskets with new parts, Kit Ref. #100.

IDENTIFYING & ORDERING PARTS

1. Refer to the parts diagram, Figure 14, and make a list of the parts required by part reference number. For example, Ref. #21, 23, 100, 1A, 2A1, and 2A2. When a gasket joint is separated, always replace with new shim-gaskets. Order Ref. #100 shim-gasket kit.
2. Now refer to the parts list, Table 11, and determine the part description and Falk part number using the part reference number (Step 1) and the drive identification (e.g., 5407J25C) in the column headers of the parts list.
3. Use the part description and Falk part number to order the required parts. In the examples of preceding Steps 1 and 2, Ref. #21, 23, 100, 1A, 2A1 and 2A2 for a 5407J25C, parts would be ordered as follows:

   Ref. #21 — Seal cage 4729121
   Ref. #23 — Seal 2914622
   Ref. #100 — Shim-gasket kit 0786841
   Ref. #1A — Shaft assembly with gear 4729124
   Ref. #2A1 — Bearing 0921780
   Ref. #2A2 — Bearing 0921780

4. Tables 12 and 13 convert Falk part numbers to bearing and seal manufacturer's part numbers. Tooth combinations are listed in Appendix G.
5. Place your order with your local Rexnord distributor. If you need to locate a distributor, phone (414) 342-3131 in the United States and Canada.

RECOMMENDED SPARE PARTS

1. For non-critical drive applications a complete set of bearings, seals and shim-gaskets is recommended. If stored in their original packaging in a dry, cool location, these parts have a minimum shelf life of 5 years.
2. For critical drive applications (where an outage would create a major production loss), a complete drive is recommended.

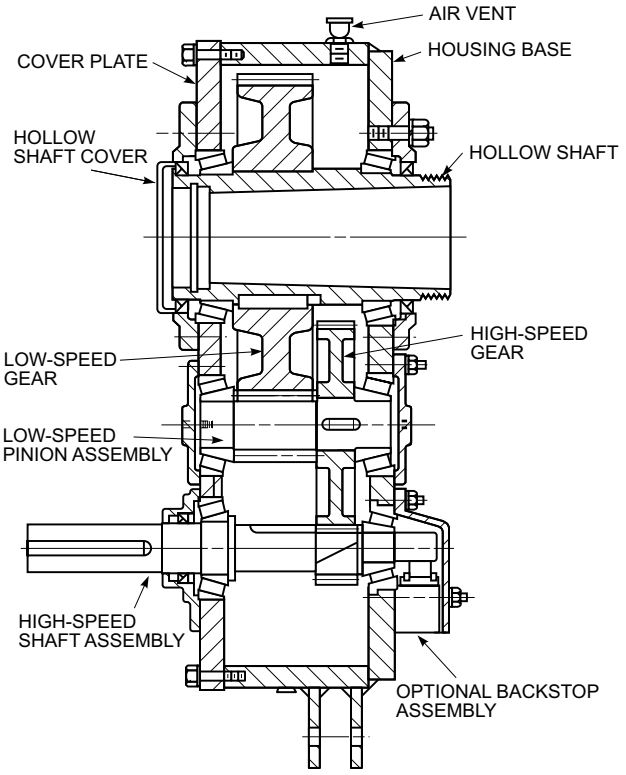

© Rexnord Corporation. All Rights Reserved.

Figure 14 — Sizes 5407 thru 5608

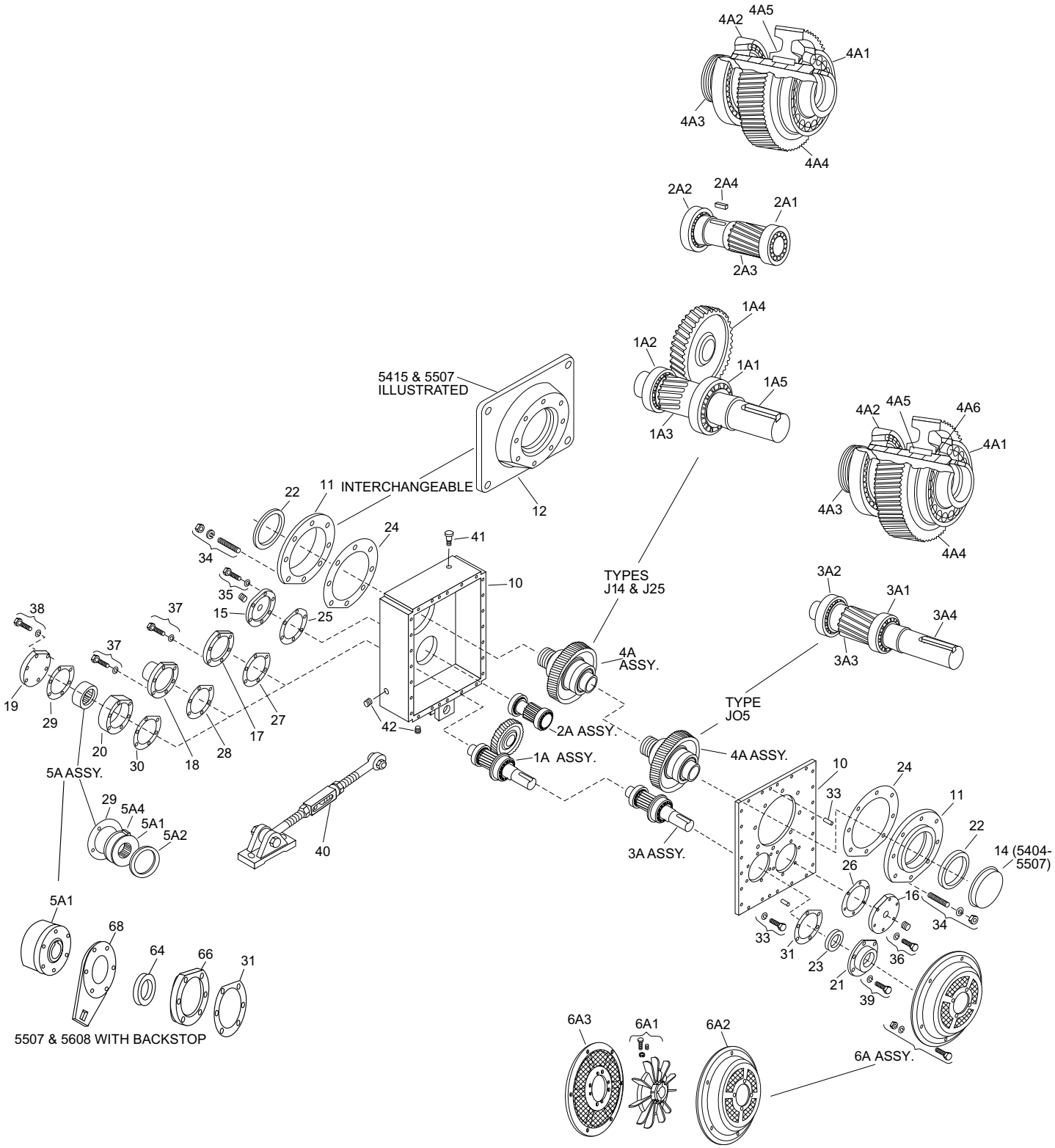

© Rexnord Corporation. All Rights Reserved.
Rexnord
3001 W. Canal St., Milwaukee, WI 53208-4200 USA
Telephone: 414-342-3131 Fax: 414-937-4359 www.rexnord.com

Table 11 — Parts List Of Falk Part Numbers

Ref. No.	Part Description	Drive Size					
		5407	5415	5507		5608	
	Housing Components - J05, J14 & J25						
11	Seal Cage	0352865	0344480	0344425		4723185	
12	Flange – Seal Housing	0364539	. . .	. . .		. . .	
12	Mounting Flange	. . .	0426963	0426935		4723190	
14	Shaft Cover	2110604	1191500	4723160		. . .	
15	Shaft Cover	4729119	4729138	4723142		4729168	
16	Shaft Cover	4729119	4729138	4723164		4729168	
17	Shaft Cover - Type J05	4729120	0344426	7392017		1237503	
17	Shaft Cover - 5507J14 & 25	. . .	. . .	7392017		. . .	
18	Shaft Cover - Type J14 & J25	2110747	0344426	7392017		. . .	
19	Shaft Cover - Type J14 & J25	1219672	0344428	. . .		. . .	
20	Backstop Cage - Type J14	1231142	0344429	. . .		. . .	
20	Backstop Cage - Type J25	1231142	0344427	. . .		. . .	
21	Seal Cage	4729121	4723144	4723165		4723186	
22	Seal - 2 Required	2922296	913004	2914624		2921418	
23	Seal	2914622	2914622	2920284		2921422	
40	Torque Arm Assembly - JR Only	0785271	0785272	0785272		0785272	
41	Air Vent	0914088	0914088	0914088		0914088	
64	Seal - 14	. . .	. . .	2917238		0912992	
64	Seal - 25	. . .	. . .	2916797		0912992	
66	Seal Cage - 14	. . .	. . .	4729318		4729169	
66	Seal Cage - 25	. . .	. . .	4729319		4729169	
67	Anchor Bracket - J14, 25	. . .	. . .	4729320		4729191	
68	Torque Arm - Backstop - J14, 25	. . .	. . .	4729346		4729346	
80	Fastener Kit - Includes Ref. #33 thru 39 & 42	4729122	4729139	4729321		4729170	
100	Shim-Gasket Kit - Includes Ref. #24 thru 31	0786841	0786842	6720196		0786844	
	Rotating Elements - J05			**Without Backstop**		**Without Backstop**	
3A	Shaft Assembly - Includes Ref. #3A1 - 3A4	4729129	4729148	4729161		4729185	
3A1	Bearing	0921855	0921494	0921752		0921751	
3A2	Bearing	0921863	0921859	0921858		2918722	
3A3	Pinion & Shaft - Includes Ref. #3A4	4729130	4729149	4729162		4729186	
4A	Shaft Assembly - Includes Ref. #4A1 - 4A6	4729133	4723150	4729163		4729189	
4A1	Bearing	2905186	0921861	0921755		2905910	
4A2	Bearing	2905186	0921861	0921755		2905910	
4A3	Hollow Shaft - Includes Ref. #4A5	4729134	4723149	4729164		4729190	
4A4	Gear	1238083	1238033	1238072		1237487	
4A6	Spacer - 5608	. . .	. . .	. . .		1237496	
6A	Fan Assembly - Includes Ref. #6A1 thru 6A3	0785773	0785881	0785893		0785468	
6A1	Fan	4729135	4729135	4729165		4729192	
6A2	Guard	4729136	4729151	4729166		4729193	
6A3	Backplate	4729137	4729152	4729167		4729194	
	Rotating Elements - J14			**Without Backstop**	**With Backstop**	**Without Backstop**	**With Backstop**
1A	Shaft Assembly With 1A4 Gear	4729123	4729140	4729324	4729325	4729171	4729177
1A	Shaft Assembly Without 1A4 Gear	4729125	4729142	4729326	4729327	4729172	4729178
1A1	Bearing	0921682	0921529	0921752	0921752	0921751	0921751
1A2	Bearing	2915106	0921860	0921858	0921858	2918722	2918722
1A3	Pinion & Shaft - Includes Ref. #1A5	4729127	4729144	4729322	4729323	4729173	4729181
1A4	Gear	1238081	1238034	1238073	1238073	0359007	0359007
5A	Backstop Assembly	0769170	0757220	. . .	6720194	. . .	6720194
	Rotating Elements - J25			**Without Backstop**	**With Backstop**	**Without Backstop**	**With Backstop**
1A	Shaft Assembly With 1A4 Gear	4729124	4729141	4729330	4729331	4729175	4729179
1A	Shaft Assembly Without 1A4 Gear	4729126	4729143	4729332	4729333	4729176	4729180
1A1	Bearing	0921349	0921494	0921752	0921752	0921751	0921751
1A2	Bearing	2915107	0921859	0921857	0921857	2918722	2918722
1A3	Pinion & Shaft - Includes Ref. #1A5	4729128	4729145	4729328	4729329	4729174	4729182
1A4	Gear	1238082	1238035	1238074	1238074	0359007	0359007
5A	Backstop Assembly	0769170	0757221	. . .	6720195	. . .	6720194

Continued on next page

© Rexnord Corporation. All Rights Reserved.

Table 11 — Parts List of Falk Part Numbers (Continued)

Ref. No.	Part Description	Drive Size					
		5407	5415	5507		5608	
	Rotating Elements - J14 & J25			Without Backstop	With Backstop	Without Backstop	With Backstop
2A	Shaft Assembly - Includes Ref. #2A1 - 2A4	4729131	4729146	4729159	4729159	4729183	4729183
2A1	Bearing	0921780	0921556	0921752	0921752	0921678	0921678
2A2	Bearing	0921780	0921556	0921530	0921530	0921678	0921678
2A3	Pinion & Shaft - Includes Ref. #2A4	4729132	4729147	4729160	4729160	4729184	4729184
4A	Shaft Assembly - Includes Ref. #4A1 - 4A5	4729133	4723150	4729163	4729163	4729189	4729189
4A1	Bearing	2905186	0921861	0921755	0921755	2905910	2905910
4A2	Bearing	2905186	0921861	0921755	0921755	2905910	2905910
4A3	Hollow Shaft - Includes Ref. #4A5	4729134	4723149	4729164	4729164	4729190	4729190
4A4	Gear	1238083	1238033	1238072	1238072	1237487	1237487
4A6	Spacer	. . .	. . .	. . .	. . .	1237496	1237496
6A	Fan Assembly	0785773	0785881	0785893	0785893	0785468	0785468
6A1	Fan	4729135	4729135	4729165	4729165	4729192	4729192
6A2	Guard	4729136	4729151	4729166	4729166	4729193	4729193
6A3	Backplate	4729137	4729152	4729167	4729167	4729194	4729194

Table 12 — Bearing Gross Reference Numbers

Falk Part Number	Manufacturer's Number
Tapered Roller Bearings ▲	
0921349	HM212046/HM212011
0921494	H715336/H715311
0921529	H715345/H715311
0921530	H414249/H414210
0921556	H715332/H715311
0921678	850/832
0921682	HM212049/HM212011
0921751	JH217249/JH217210
0921752	JH415647/JH415610
0921755	JM736149/JM736110
0921780	HM212044/HM212011
0921855	5584/5535
0921857	65212/65500B
0921858	65237/65500B
0921859	65200/65500B
0921860	65225/65500B
0921861	67782/67720
0921863	5565/5535
2905186	LM330448/LM330410
2905910	LM742749/LM742710
2915106	HM807040/HM807015B
2915107	HM807035/HM807015B
2918722	HH814542/HH814510

▲ Rexnord suppliers of Tapered Roller Bearings are: Timken, Bower and Tyson.

Table 13 — Seal Cross Reference Number

Falk Part Number	Manufacturer's Number ■	
	Chicago Rawhide	National
0912992	22449	. . .
0913004	64998V	. . .
2914622	24899	. . .
2914624	70054	. . .
2916797	21091	. . .
2917238	22361	. . .
2920284	29383	. . .
2921418	85018	. . .
2921422	29912	415995V
2922296	60013	. . .

■ Subject to substitution of equivalent seals without notice.

© Rexnord Corporation. All Rights Reserved.
Rexnord
3001 W. Canal St., Milwaukee, WI 53208-4200 USA
Telephone: 414-342-3131 Fax: 414-937-4359 www.rexnord.com

Section III

DRIVE REASSEMBLY

REFER TO PARTS DRAWING FIGURE 14.

1. **GENERAL**
   a. Clean all parts to be reassembled and coat all taper roller bearing cups and pinion teeth with oil. DO NOT lubricate gear teeth prior to assembly on shaft.
   b. Heat all tapered roller bearing cones in an oven to 275°F (135°C).

   ***CAUTION**: Do not apply flame directly to bearings or rest bearings directly on a heated surface.*

   c. Slide or press all bearing cones tight against the shaft shoulder or spacer.

   ***CAUTION**: Do not apply force to the bearing cage or rollers. Apply force against the cone only.*

2. **ASSEMBLY OF TAPERED ROLLER BEARING CUPS** — Where bearings will be reused and where bearing cups were not removed from the housing, skip to Step 3. It is recommended that bearings be replaced whenever drive is disassembled after being in service.

   Install bearing cups only in housing base at this time. Coat bearing cups and housing bores with an SAE 20 (or heavier) oil and drive or press cup squarely into the housing bores until positioned as shown in Figures 15 and 16. Use a flat plate and a brass bar to avoid damaging the bearing cups. NOTE: The exact positioning of the bearings in the bores will be achieved during the bearing adjustment procedure in Step 6.

Figure 15

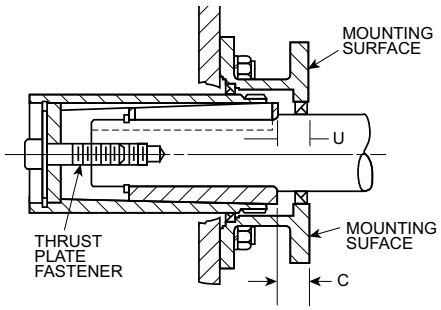

Figure 16

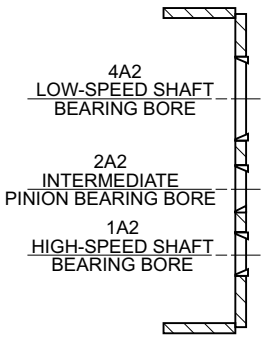

***CAUTION**: Take care not to allow cups to cock during their installation as this could result in permanent damage to housing.*

If cups become cocked in the bores, tap the high side lightly to re-position.

3. Assemble seal cages to housing output side(base) as follows:
   a. Turn housing onto its side being careful that the bearing cups do not fall out of the bores. Assemble low-speed seal cage without seal and one .015" (0.38 mm) shim-gasket, Ref. #11 or 12 and 24. Cross tighten fasteners, Ref. #34, to torque specified in Table 14.

   Check to be sure that cages and covers are registered on the bearing cups to avoid hanging up of the cups.

Table 14 — Fastener Tightening Torques ▲

Location	Fastener Size — Inch Tightening Torque — lb-ft (Nm)			
	.375-16	.500-13	.750-10	.875-9
Low-Speed Seal Cage	. . .	. . .	330 (447)	533 (723)
Intermediate End Cover	27.5 (37,3)	68.8 (93,2)	. . .	. . .
High-Speed Seal Cage/ End Cover	27.5 (37,3)	68.8 (93,2)	. . .	. . .
Housing Cover	. . .	68.8 (93,2)	245 (332)	. . .

▲ Torques are for non-lubricated fasteners.

   b. Assemble intermediate end cover and one .015" (0.38 mm) shim-gasket, Ref. #15 and 25. Cross tighten fasteners, Ref. #35, to torque specified in Table 14.
   c. Assemble high-speed pinion shaft cover or seal cage without seal as follows:

   SIZES 5407-5608 WITHOUT BACKSTOP — Assemble shaft cover and one .015" (0.38 mm) shim-gasket, Ref. #17 and 27. Cross tighten fasteners, Ref. #37, to torque specified in Table 14.

   SIZES 5407 & 5415 WITH BACKSTOP — Assemble shaft cover, 1st .015" (0.38 mm) shim-gasket, backstop cage and 2nd .015" (0.38 mm) shim-gasket, Ref. #19, 20, 29 and 30. Finger tighten fasteners, Ref. #38. NOTE: The backstop, Ref. #5A will be added later.

   SIZES 5507 & 5608 WITH EXTERNAL BACKSTOP — Assemble seal cage without seal and one .015" (0.38 mm) shim-gasket, Ref #31 and 66. Cross tighten fasteners to torque specified in Table 14. NOTE: The seal, Ref. #64, will be added later.

© Rexnord Corporation. All Rights Reserved.

4. **SHAFT ASSEMBLIES** — Where bearings and gears were not removed from the shafts, skip to Step 5. If bearings and gears were removed from the shafts, reassemble parts on the shaft per Figures 17 thru 20 as follows:
   a. To assemble gear (Ref. #1A4 or 4A4), heat gear in an oven to 325°F (163°C). Install key. Press gear onto the shaft tightly against the shoulder. For size 5608, be sure to place spacer, Ref. #4A6, Figure 20, in the proper location on shaft assembly, Ref. #4A, before pressing on the bearing.
   b. To assemble bearings, heat bearing cone in an oven to a maximum of 275°F (135°C), then slide or press bearing cone tight against the shaft shoulder or spacer.

   ***CAUTION**: Allow assembly to cool. Apply a coat of oil to the cooled bearings and gear teeth to lubricate & avoid scoring of the working surfaces.*

Figure 17 — 1A Shaft

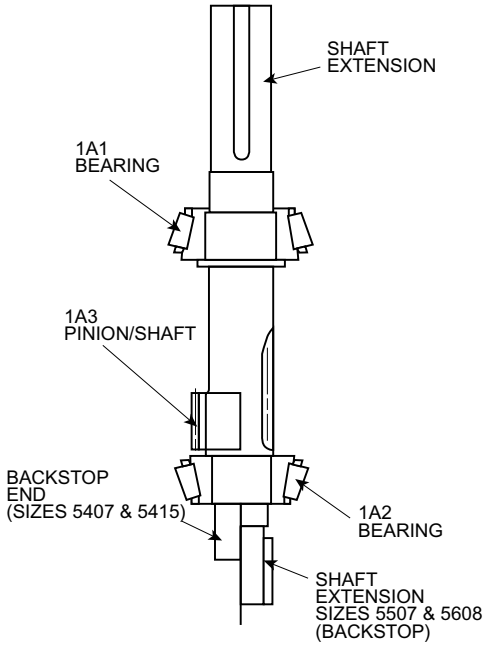

5. **DRIVE ASSEMBLY** — Turn drive housing base on work bench to allow the shaft assemblies to be lowered into the housing. Block up the housing so that when low-speed shaft assembly, Ref. #4A, is in place, the threaded end of the shaft will clear the bench surface. Before assembly, inspect housing and all shaft assemblies to see that all foreign matter has been removed.
   a. **SINGLE REDUCTION** — Lower high-speed shaft assembly, Ref. #3A, Figure 18, into housing and tip away from other housing bores. While lowering the low-speed shaft assembly, Ref. #4A, Figure 20, into housing tip high-speed shaft into the gear mesh of the low-speed gear as the shaft nears final position.
   b. **DOUBLE REDUCTION** — Lower high-speed shaft assembly, Ref. #1A, Figure 17, into housing and tip away from other bores. Simultaneously lower the intermediate shaft assembly, Ref. #2A, Figure 19, and the low-speed shaft assembly, Ref. #4A, Figure 20, into the housing. As shafts approach their final position, tip the high-speed shaft pinion into the high -speed gear mesh, Ref. #1A4.

Figure 18 — 3A Shaft Assembly

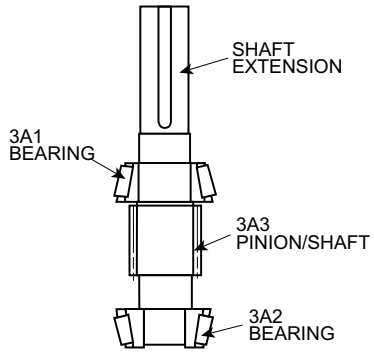

Figure 19 — 2A Shaft Assembly

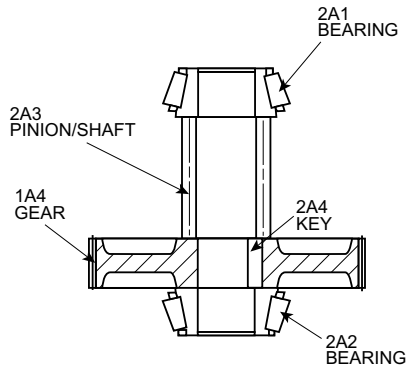

Figure 20 — 4A Shaft Assembly

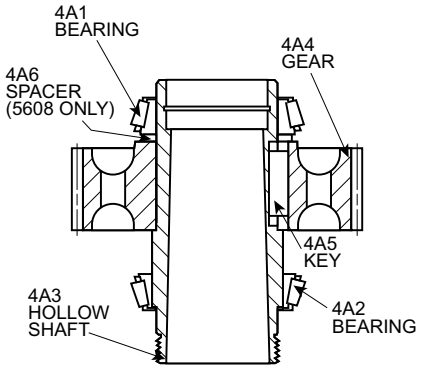

© Rexnord Corporation. All Rights Reserved.
Rexnord
3001 W. Canal St., Milwaukee, WI 53208-4200 USA
Telephone: 414-342-3131 Fax: 414-937-4359 www.rexnord.com

c. Arrange the shaft assemblies to ensure that the gears are in mesh and bearing cones are in the cups.

d. Apply a bead of Loctite Gasket Eliminator #515 or equivalent to housing base as shown in Figure 21. Carefully lower the housing cover (using eyebolts as recommended in Section II, Step 11). Remove eyebolts. Install taper screw dowels through the housing cover into the housing base. NOTE: Be sure the nut on the taper screw dowel is loose so that the nut does not interfere with seating the taper screw dowel. Seat taper screw dowel into housing base by striking the head of the taper screw dowel with a hammer. Install cover fasteners and immediately (within 3 minutes) tighten to torque specified in Table 14.

Figure 21

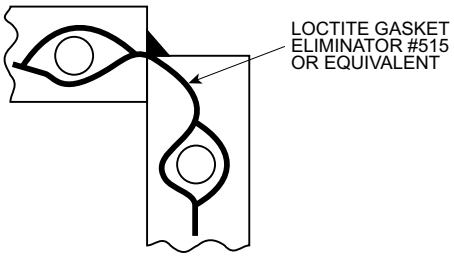

e. Apply film of oil to housing cover bores and bearing cups & carefully install the bearing cups into the bores as described in Step 2.

f. Install seal cages without seals and covers:

DOUBLE REDUCTION DRIVES — Use the entire shim-gasket kit with the .015" (0.38 mm) shim-gasket against the housing. It is important that the .015" (0.38 mm) shim-gasket be placed against the housing to prevent leakage. Cross tighten fasteners to torques specified in Table 14. Parts involved are as follows:

Low-speed seal cage Ref. #11, 24 & 34; shaft cover Ref. #16, 26 & 36; high-speed seal cage Ref. #21, 31 & 39.

SINGLE REDUCTION DRIVES — Install end cover, Ref. #16, with one .015" (0.38 mm) shim-gasket, Ref. #26, on unused bore. Cross tighten fasteners, Ref. #36, to torque specified in Table 14. For the other seal cages follow instructions from above as described for double reduction drives.

6. **BEARING ADJUSTMENT**

a. **FOR DRIVES EQUIPPED WITH TA TAPER BUSHING** — Turn drive over onto the input housing and carefully thread bushing nut onto hollow shaft threads. Rotate the shaft to seat the cone assemblies in the bearing cups. Set up a dial indicator, Figure 22. Rotate and oscillate shaft with axial force applied in both directions to obtain the shaft axial float measurement (upward force can be applied by prying the bushing nut upward). If no float is measured, remove bushing nut and seal cage & add shim-gaskets until float is measurable. Proceed to Step 6(c).

b. **FOR DRIVES WITHOUT THE TA TAPER BUSHING** — Insert the hollow shaft thrust plate and secure with the retaining ring as illustrated in Section I,

Figure 22

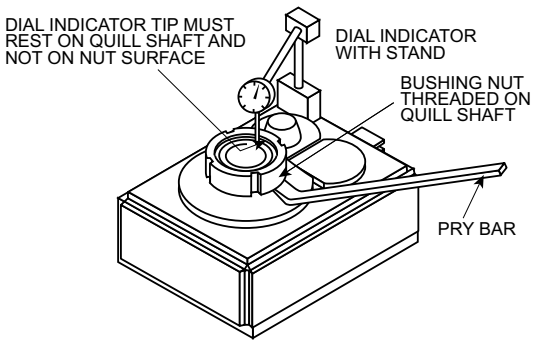

Figure 4. Thread a bolt into the thrust plate. Set up a dial indicator on the input housing face with the indicator probe on the end of the hollow shaft. DO NOT indicate from the thrust plate or fastener head. Rotate and oscillate shaft with axial force applied in both directions to obtain the axial float measurement (Upward force can be applied by prying the head of the thrust plate bolt upward). If no float is measured, remove seal cage and add shim-gaskets until float is measurable.

c. If the axial float from 6(a) or (b) is greater than .010" (0.25 mm), subtract sufficient shims to obtain .001" to .010" (0.03 mm to 0.25 mm) float. Refer to Table 15 for shim thickness. Take into account the compressibility of shim-gaskets from Table 16. Reassemble and repeat Step 6(a) or (b). When float is within .001" to .010" (0.03 mm to 0.25 mm), proceed to Step 6(d).

Table 15 — Individual Shim-Gasket Part Numbers

Ref. No.	Shim Thickness Inches (mm)	DRIVE SIZE			
		5407	5415	5507	5608
100	. . .	0786841	0785587	0786843	0786844
24	0.007 (0.18) 0.009 (0.23) 0.015 (0.38) 0.031 (0.79)	1231144 0767761 0767762 0767763	1220259 0757456 0757457 0757458	1220130 0757453 0757454 0757455	1231222 0767802 0767803 0767804
25	0.015 (0.38)	0755904	0757460	0757460	3200133
26	0.007 (0.18) 0.009 (0.23) 0.015 (0.38) 0.031 (0.79)	1219682 0755903 0755904 0755905	1220540 0757459 0757460 0757461	1220128 0755947 0755948 0755949	0761568 0761569 3200133 . . .
27 & 28	0.015 (0.38)	0755904	1220129	0757460	0710703
29 & 30	0.015 (0.38)	0755904	1220129	1220129	. . .
31	0.007 (0.18) 0.009 (0.23) 0.015 (0.38) 0.031 (0.79)	1219682 0755903 0755904 0755905	1220540 0757459 0757460 0757461	1220128 0755947 0755948 0755949	1130518 0710702 0710703 . . .

Table 16 — Falk Shim-Gasket Compressibility

Thickness Inches (mm)					
	New	0.007 (0.18)	0.009 (0.23)	0.015 (0.38)	0.031 (0.79)
	Compressed	0.006 (0.15)	0.008 (0.20)	0.013 (0.33)	0.028 (0.71)

© Rexnord Corporation. All Rights Reserved.

d. Refer to Table 17 and note the preload specified for bearings Ref. #4A1 and 4A2. Add to the upper and lower limits shown, the axial movement obtained in Step 6(c). This will indicate the thickness of shims to be removed to obtain the specified preload. For example, if the preload in Table 17 is .005" to .007" (0.13 mm to 0.18 mm) and the axial movement was .007" (0.18 mm), removal of shims with a total thickness of .012" to .014" (0.31 mm to 0.36 mm) will produce the desired preload. Table 15 provides shim thicknesses for each shim pack to assist in obtaining the desired results. Take into account the compressibility of shim-gaskets from Table 16.

e. Remove seal cage, Ref. #11, and remove shim-gasket(s) as determined in Step 6(d). Reattach the seal cage and tighten fasteners to torque specified in Table 14.

Table 17 — Preload & Axial Settings – Inch (mm)

Drive Size	Bearings Ref. #4A1 & 4A2	Shaft & Pinion Ref. #2A3	Shaft & Pinion Ref. #1A3 or 3A3
	Bearing Preload	Axial Float	Axial Float ▲
5407 5415 5507 5608	.004-.006 (0.10-0.15) .005-.007 (0.13-0.18) .006-.008 (0.15-0.20) .008-.010 (0.20-0.25)	.001-.003 (0.03-0.08)	.001-.003 (0.03-0.08)

▲ NOTE: For Sizes 5407 & 5415 equipped with a backstop, axial float measurement must be within the following range: .001 preload to .001 float.

f. AXIAL FLOAT ADJUSTMENT, REF. #2A3 — Remove pipe plug from center of shaft cover, Ref. #16, and install a .375-16 x 2" or longer fastener thru the hole in the shaft cover into the threaded hole in the pinion shaft. Turn by hand until snug. Set up a dial indicator with the probe on the fastener head as illustrated in Figure 23. Turn the fastener in a clockwise direction, pushing and pulling the fastener to make certain the bearings are properly seated. Measure the axial float. Subtract from this reading the axial float for Ref. #2A3 shaft found in Table 15. This indicates the thickness of shims to be removed. When removing the shim(s) retain the .015" (0,38 mm) thickness against the drive housing. Retighten fasteners and recheck float. Readjust shimming, if necessary, until proper axial float is achieved (Table 17).

g. **AXIAL FLOAT ADJUSTMENT, REF. #1A3 or 3A3** — Refer to Figure 24 and adjust float as follows:

Set up a dial indicator for determining axial movement of the high speed shaft Ref. #1A3 or 3A3. Lift upward with a twisting motion to obtain a reading.

***WARNING**: Cover keyway with tape to avoid lacerations to the hand.*

Subtract from this reading the axial float for shaft, Ref. #1A3 or 3A3, found in Table 15. This indicates the thickness of shim(s), Ref. #31, to be removed. When removing the shim(s), retain the .015" (0.38 mm) thick shim against the housing, Ref. #10. Retighten fasteners and recheck float. Readjust shimming, if necessary, until proper float is achieved (Table 17).

7. **SEAL INSTALLATION**

Seals can be installed after all bearing adjustments have been completed. Refer to Section II, Step 7, to install seals, Ref. #22 & 23. NOTE: When removing a seal cage to install a seal, be sure to replace the same shim-gaskets as removed to assure correct bearing adjustments.

8. **BACKSTOP INSTALLATION**

If drive will be installed on the driven equipment using the thrust plate and thrust plate fastener, install the backstop at this time. Refer to Appendix B, for installation instructions.

DRIVE IS READY TO INSTALL — Refer to Section I.

Figure 23

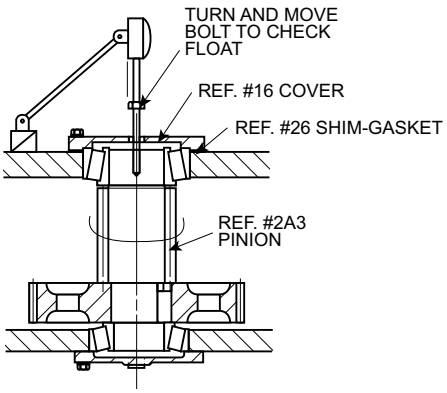

Figure 24

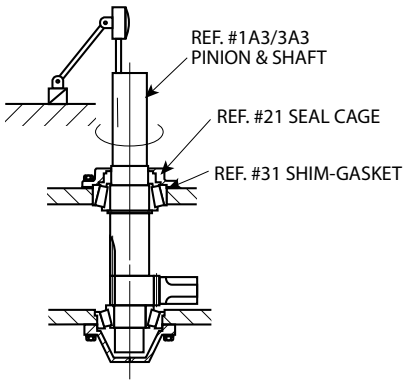

© Rexnord Corporation. All Rights Reserved.
Rexnord
3001 W. Canal St., Milwaukee, WI 53208-4200 USA
Telephone: 414-342-3131 Fax: 414-937-4359 www.rexnord.com

TABLE OF CONTENTS

Appendix A: Lubrication Recommendations. 22
Appendix B: Backstop Installation 30
Appendix C: TA Removal Tool 34
Appendix D: Motor Mount Installation 36
Appendix E: Vertical Standpipe Installation 38
Appendix F: Modifications for Non-Standard Mounting Positions 40
Appendix G: Retaining Rings for Bushing Nuts and Thrust Plates & Tooth Combinations for Vibrations Analysis 42
Appendix H: Drive Shaft Recommendations for Tapered Drive Shafts 43
Appendix J: Drive Shaft Recommendations Using TA Taper Bushing 44
Appendix K: Drive Shaft Recommendations Using (TCB) Kit 46
Appendix L: V-Belt Guard Installation. 48
Appendix M: Electric Fan Installation. 50
Appendix N: Reliability Package 52

© Rexnord Corporation. All Rights Reserved.

Lubrication Recommendations

INTRODUCTION

Carefully follow instructions on the drive nameplate, warning tags and installation manuals furnished with the drive.

Lubricants listed in this manual are typical products ONLY and should not be construed as exclusive recommendations. Industrial type petroleum-based rust and oxidation inhibited (R & O), industrial type extreme pressure (EP) or industrial type micropitting resistant gear lubricants are the recommended gear lubricants. They can be formulated using petroleum or synthetic base stocks.

The section on food grade lubricants provides guidance selecting lubricants for applications needing this class of lubricants. Food grade lubricants are formulated using petroleum or different types of synthetic base stocks.

LUBRICANT SELECTION PROCESS

1. Refer to Table 3 or 4 for proper lubricant viscosity grade based on ambient temperature range. See Falk GMax 6000 paragraph on this page for ambient air temperature range if using this lubricant.
2. Refer to Table 1 for summary of lubricant type.
3. Using proper lubricant table and viscosity grade, select desired lubricant manufacturer name.
4. Refer to Table 2 for approximate oil capacity to purchase.

TABLE 1 — Summary of Lubricant Type and Greases

Petroleum-Based		
R & O Inhibited See Table 5A	Extreme Pressure (EP) ♦ See Table 5B	Micropitting Resistant ♦ See Table 5C
Synthetic Lubricant, Polyalphaolefin Type (PAO)		
R & O Inhibited See Table 6A	Extreme Pressure (EP) ♦ See Table 6B	Micropitting Resistant ♦ See Table 6C
Synthetic Lubricant, Polyalphaolefin Glycol Type (PAG)		
See Falk GMax 6000 (Paragraph to Right)		
Conventional Grease		
See Table 7		
Food Grade Lubricant & Grease		
See Page 27		

♦ DO NOT use in drives equipped with internal backstop.

VISCOSITY (IMPORTANT)

The proper viscosity grade for petroleum-based lubricant is found in Table 3. For synthetic lubricant viscosity grades, refer to Table 4 and the “Synthetic Lubricants” paragraphs.

Viscosity grade is determined by ambient air temperature in immediate vicinity of gear drive. Lubricant selections must have a pour point at least 10°F (5.5°C) below the expected minimum ambient starting temperature.

LUBRICANT TYPES

PETROLEUM-BASED LUBRICANTS (TABLES 5A, 5B & 5C) — Industrial type petroleum-based rust and oxidation inhibited (R & O) gear lubricants are the most common and readily available general purpose gear lubricants.

SYNTHETIC LUBRICANTS (TABLES 6A, 6B & 6C) — Synthetic lubricants of the polyalphaolefin (PAO) type are recommended for cold climate operation, high temperature applications, extended temperature range (all season) operation and/or extended lubricant change intervals. The proper viscosity grade of synthetic lubricant is given in Table 4.

Polyalkylene glycols (PAG) are another class of synthetic lubricants. They have similar performance properties as PAO synthetics - low pour point, stable at elevated temperature and high viscosity index. PAG's have exceptional tolerance to water contamination.

WARNING: *Polyalkylene glycols (PAG’s) are not compatible with petroleum mineral oil or PAO synthetic lubricants and must not be topped off with either lubricant. In addition, petroleum mineral oils or PAO synthetic lubricants must not be used to top off systems containing PAG’s. Do not use PAG’s in gear drives with painted interior housing walls unless paint compatibility is checked. Compatibility with oil seals and gasket materials must be checked prior to use. PAG lubricants are not compatible with polycarbonate sight glass. Use glass sight glass.*

Falk GMax 6000 – Rexnord markets Falk GMax 6000, a polyalkylene glycol lubricant. It is available in ISO VG 135 and covers ambient air temperature range -30° to +125°F (-34° to +52°C). Gear drives equipped with internal backstop can use GMax in ambient temperatures above -20°F (-29°C).

WARNING*: GMax 6000 is not compatible with petroleum mineral oil or PAO synthetic lubricants and must not be topped off with either lubricant. In addition, petroleum mineral oils or PAO synthetic lubricants must not be used to top off systems containing GMax 6000. Do not use GMax 6000 in gear drives with painted interior housing walls unless paint compatibility is checked. Compatibility with oil seals, and gasket materials must be checked prior to use. GMax 6000 is not compatible with polycarbonate sight glass. Use glass sight glass.*

ANTI-WEAR (AW) LUBRICANTS — For moderately loaded gear drives or operating conditions challenging for conventional R & O oils, industrial type anti-wear (AW) lubricants are suggested. These lubricants contain anti-wear additives that provide stronger thicker lubricant film to help maintain surface separation. Synthetic lubricants by inherent nature of base stock properties provide anti-wear performance.

EXTREME PRESSURE (EP) LUBRICANTS (TABLES 5B & 6B) — For highly loaded drives or for drives loaded in excess of original estimates, industrial-type petroleum EP lubricants are preferred. EP lubricants are manufactured from petroleum or synthetic base lubricants. Anti-scuff is another term used to describe EP lubricants.

© Rexnord Corporation. All Rights Reserved.
Rexnord
3001 W. Canal St., Milwaukee, WI 53208-4200 USA
Telephone: 414-342-3131 Fax: 414-937-4359 www.rexnord.com

CAUTION: EP LUBRICANTS & INTERNAL BACKSTOPS — Do not use EP lubricants or lubricant formulations including sulfur-phoshorus (EP), chlorine, lead derivatives, graphite or molybdenum disulfides in drives equipped with internal cartridge type backstops. Lubricant formulations may change over time. Some lubricants in Table 5A & 6A may contain higher amounts of additives to reduce friction, resulting in lubricant properties approaching that of extreme pressure (EP) lubricants; end user should consult lubricant manufacturer/supplier and Rexnord as necessary. Typically EP lubricants in Tables 5B & 6B contain these additives.

MICROPITTING RESISTANT LUBRICANTS (TABLES 5C & 6C) — Micropitting resistant lubricants are specially developed for surface hardened gearing commonly used in modern industrial gear drives. These lubricants contain additives to resist formation of micropitting and other conventional forms of gear wear. Highly loaded gear drives or applications where operating loads are not well defined may benefit from this type of lubricant. Generally lubricants are available in limited number of viscosity grades.

CAUTION: MICROPITTING RESISTANT LUBRICANTS & INTERNAL BACKSTOPS — Do no use micropitting resistant lubricants in drives equipped with internal cartridge type backstops. These lubricants are listed in Tables 5C & 6C.

WARNING: LUBRICANTS IN FOOD PROCESSING INDUSTRY — Generally conventional gear lubricants are classified as H2 by NSF (National Sanitation Foundation) since they contain harmful substances and should not be used in the food processing industry. Lubricants registered as H1 by NSF are suitable for food processing applications.

CLIMATE CONDITIONS — Ambient temperature in immediate vicinity of gear drive is very important for determining viscosity grade. Table 3 provides viscosity grade selections for petroleum-based lubricants. See Table 4 for synthetic lubricants.

OIL LEVELS

Fill the drive with lubricant to pipe plug level indicated in illustrations in Section 1. Approximate oil capacities are given in Table 2 below.

TABLE 2 — Approximate Oil Capacity ▲

Drive Size	JR, JF & JSC Gallons (Liters)	JRV & JFV Gallons (Liters)
5407	4.3 (16.3)	6.3 (23.8)
5415	7.0 (26.5)	9.5 (36.0)
5507	10.3 (39.0)	13.3 (50.3)
5608	12.0 (45.4)	19.5 (73.9)

▲ Quantities are approximate. Always fill drive to specified level.

TABLE 3 — Viscosity Grade Recommendations For Petroleum-Based Lubricants

Ambient Temperature Range	+30° to +90°F (-1° to +32°C)	+70° to +125°F (+21° to +52°C)
ISO Viscosity Grade	220	320
AGMA Viscosity Grade	5	6

LUBRICANT ANALYSIS AND CHANGES

OIL ANALYSIS REPORT — Checking oil condition at regular intervals is recommended. Analyze oil samples approximately every 1000 hours for petroleum lubricants or every 3000 hours for synthetic lubricants. In the absence of more specific limits, the guidelines listed below may be used to indicate when to change petroleum or polyalphaolefin type synthetic lubricants:

1. Water content is greater than 500 ppm (parts per million) (0.05%).
2. Iron content exceeds 150 ppm.
3. Silicon (dust/dirt) exceeds 25 ppm, above reference sample from new oil container.
4. Copper content exceeds 75 ppm.
5. TAN (Total Acid Number) 50% increase above reference sample from new oil container.
6. Viscosity changes more than ±15%.
7. Solid particle contamination code exceeds 25/22/18 for particle sizes ≥4/≥6/≥14 microns, respectively per ISO 4406.

Guidelines for when to change Falk GMax 6000 polyalkylene glycol type lubricant are:

1. Water content is greater than 3%.
2. Iron content exceeds 150 ppm.
3. Silicon (dust/dirt) exceeds 25 ppm, above reference sample from new oil container.
4. Copper content exceeds 75 ppm.
5. Viscosity changes more than ±15%.
6. Solid particle contamination code 25/22/18 per ISO 4406.

Laboratory analysis is recommended for optimum lubricant life and gear drive performance.

TABLE 4 — Viscosity Grade Recommendations For Synthetic Lubricants

Ambient Temperature Range	Cold Climates		Normal Climates		
	–30° to +10°F (–34° to –12°C)	–15° to +50°F (–26° to +10°C)	0° to +80°F (–18° to +27°C)	+10° to +125°F ▲ (–12° to +52°C)	+20° to +125°F (–7° to +52°C)
ISO Viscosity Grade	32	68	150	220	320
AGMA Viscosity Grade	0	2	4	5	6

▲ Gear drives NOT equipped with internal backstop may widen the ambient temperature range to -18° to +125°F (-28° to +52°C).

© Rexnord Corporation. All Rights Reserved.

TABLE 5A — Petroleum Based R & O (Rust & Oxidation) Inhibited Lubricants ▲

Maximum Operating Temperature of Lubricants 200°F (93°C)

ISO Viscosity Grade	220	320
AGMA Viscosity Grade	5	6
Viscosity cSt @ 40°C ■	198-242	288-352
Viscosity SSU @ 100°F	918-1122	1335-1632
Manufacturer	**Lubricant Name**	**Lubricant Name**
Castrol Industrial Lubricants	Hyspin AWS 220 Castrol Paradene R&O 220 Castrol Paradene AW 220	- - - Castrol Paradene R&O 320 Castrol Paradene AW 320
Chevron / Texaco / Caltex	Rando HD 220	Rando HD 320
Citgo Petroleum Corp.	Pacemaker SD 220	Pacemaker SD 320
Exxon Mobil / Esso	DTE Oil BB Vacuoline 533	DTE Oil AA Vacuoline 537
Petro-Canada Lubricants	TurboFlo R&O 220	TurboFlo R&O 320
Phillips 66 / Conoco / 76 Lubricants / Kendall	Multipurpose R&O 220	Multipurpose R&O 320
Shell Oil Co.	Morlina S2 B 220 Morlina S2 BA 220	Morlina S2 B 320 Morlina S2 BA 320
Total Lubricants USA / Keystone Div. Penwalt Corp.	Cirkan ZS 220	Cirkan ZS 320
Whitmore Manufacturing Company	Hyperion 220	Hyperion 320

▲ Minimum viscosity index of 90.

■ Kinematic viscosity in units of mm^2/s is equivalent to cSt (centistokes).

TABLE 5B — Petroleum Based EP (Extreme Pressure) Lubricants ▲ ♦

Maximum Operating Temperature of Lubricants 200°F (93°C)

ISO Viscosity Grade	220	320
AGMA Viscosity Grade	5	6
Viscosity cSt @ 40°C ■	198-242	288-352
Viscosity SSU @ 100°F	918-1122	1335-1632
Manufacturer	**Lubricant Name**	**Lubricant Name**
Castrol Industrial Lubricants	Alpha SP 220	Alpha SP 320
Chevron / Texaco / Caltex	Meropa 220 Ultra Gear 220	Meropa 320 Ultra Gear 320
Citgo Petroleum Corp.	EP Compound 220	EP Compound 320
Exxon Mobil / Esso	Mobilgear 600 XP 220	Mobilgear 600 XP 320
Fuchs Lubricants Company	GearMaster CLP Oils 220	- - -
Petro-Canada Lubricants	Enduratex EP 220	Enduratex EP 320
Phillips 66 / Conoco / 76 Lubricants / Kendall	Extra Duty Gear Oil 220	Extra Duty Gear Oil 320
Shell Oil Co.	Omala S2 G 220	Omala S2 G 320
Total Lubricants USA / Keystone Div. Penwalt Corp.	Carter EP 220	Carter EP 320

▲ Minimum viscosity index of 90.

■ Kinematic viscosity in units of mm^2/s is equivalent to cSt (centistokes).

♦ DO NOT use in drives equipped with internal backstop.

TABLE 5C — Petroleum Based Micropitting Resistant Lubricants ▲ ♦

Maximum Operating Temperature of Lubricants 200°F (93°C)

ISO Viscosity Grade	220	320
AGMA Viscosity Grade	5	6
Viscosity cSt @ 40°C ■	198-242	288-352
Viscosity SSU @ 100°F	918-1122	1335-1632
Manufacturer	**Lubricant Name**	**Lubricant Name**
Kluber Lubrication	Kluberoil GEM 1 N 220	Kluberoil GEM 1 N 320

▲ Minimum viscosity index of 90.

■ Kinematic viscosity in units of mm^2/s is equivalent to cSt (centistokes).

♦ DO NOT use in drives equipped with internal backstop.

© Rexnord Corporation. All Rights Reserved.
Rexnord
3001 W. Canal St., Milwaukee, WI 53208-4200 USA
Telephone: 414-342-3131 Fax: 414-937-4359 www.rexnord.com

TABLE 6A — Synthetic PAO (Polyalphaolefin) R & O (Rust & Oxidation) Inhibited Lubricants ▲

ISO Viscosity Grade	32	68	150	220 ●	320
AGMA Viscosity Grade	0	2	4	5	6
Viscosity cSt @ 40°C ■	28.8-35.2	61.2-74.8	135-165	198-242	288-352
Viscosity SSU @ 100°F	134-164	284-347	626-765	918-1122	1335-1632
Manufacturer	**Lubricant Name**	**Lubricant Name**	**Lubricant Name**	**Lubricant Name**	**Lubricant Name**
Castrol Industrial Lubricants	Alphasyn T 32 Castrol Isolube 32	Alphasyn T 68 Castrol Isolube 68	Alphasyn T 150 Castrol Isolube 150	Alphasyn T 220 Castrol Isolube 220	Alphasyn T 320 Castrol Isolube 320
Chevron / Texaco / Caltex	Cetus HiPerSYN Oil 32	Cetus HiPerSYN Oil 68	Cetus HiPerSYN Oil 150	Cetus HiPerSYN Oil 220	Cetus HiPerSYN Oil 320
Citgo Petroleum Corp.	- - -	CITGEAR Synthetic HT 68	CITGEAR Synthetic HT 150	CITGEAR Synthetic HT 220	CITGEAR Synthetic HT 320
Exxon Mobil / Esso	Mobil SHC 624	Mobil SHC 626	Mobil SHC 629	Mobil SHC 630	Mobil SHC 632
Kluber Lubrication	- - -	Klubersynth G 4 68	Klubersynth G 4 150	Klubersynth G 4 220	- - -
Petro-Canada Lubricants	Synduro SHB 32	Synduro SHB 68	Synduro SHB 150	Synduro SHB 220	- - -
Phillips 66 / Conoco / 76 Lubricants / Kendall	- - -	Syncon R&O 68	Syncon R&O 150 ★	Syncon R&O 220 ★	Syncon R&O 320 ★
Shell Oil Co.	- - -	Morlina S4 B 68	Morlina S4 B 150	Morlina S4 B 220	Morlina S4 B 320

▲ Minimum viscosity index of 130. Consult lubricant supplier/manufacturer for maximum operating temperature.
■ Kinematic viscosity in units of mm^2/s is equivalent to cSt (centistokes).
● Gear drives NOT equipped with internal backstop may widen the ambient tempeature range to -18° to +125°F (-28° to +52°C).
★ Minimum viscosity index of 120.

TABLE 6B — Synthetic PAO (Polyalphaolefin) EP (Extreme Pressure) Lubricants ▲♦

ISO Viscosity Grade	32	68	150	220 ●	320
AGMA Viscosity Grade	0	2	4	5	6
Viscosity cSt @ 40°C ■	28.8-35.2	61.2-74.8	135-165	198-242	288-352
Viscosity SSU @ 100°F	134-164	284-347	626-765	918-1122	1335-1632
Manufacturer	**Lubricant Name**	**Lubricant Name**	**Lubricant Name**	**Lubricant Name**	**Lubricant Name**
Castrol Industrial Lubricants	- - -	Castrol Isolube EP 68	Alphasyn EP 150 Castrol Isolube EP 150	Alphasyn EP 220 Castrol Isolube EP 220	Alphasyn EP 320 Castrol Isolube EP 320
Chevron / Texaco / Caltex	- - -	- - -	Tegra Synthetic Gear Lubricant 150	Tegra Synthetic Gear Lubricant 220	Tegra Synthetic Gear Lubricant 320
Citgo Petroleum Corp.	- - -	CITGEAR Synthetic EP Gear 68	CITGEAR Synthetic EP Gear 150	CITGEAR Synthetic EP Gear 220	CITGEAR Synthetic EP Gear 320
Exxon Mobil / Esso	- - -	- - -	Mobil SHC Gear 150	Mobil SHC Gear 220	Mobil SHC Gear 320
Fuchs Lubricants Company	- - -	- - -	- - -	Renolin Unisyn CLP 220	Renolin Unisyn CLP 320
Kluber Lubrication	- - -	- - -	Klubersynth EG 4 150	Klubersynth EG 4 220	Klubersynth EG 4 320
Petro-Canada Lubricants	- - -	- - -	Enduratex Synthetic EP 150	Enduratex Synthetic EP 220	Enduratex Synthetic EP 320
Phillips 66 / Conoco / 76 Lubricants / Kendall	- - -	- - -	Syncon EP Plus Gear Oil 150	Syncon EP Plus Gear Oil 220	Syncon EP Plus Gear Oil 320
Shell Oil Co.	- - -	Omala S4 GX 68	Omala S4 GX 150	Omala S4 GX 220	Omala S4 GX 320
Whitmore Mfg. Company	- - -	- - -	Decathlon HD 150	Decathlon HD 220	Decathlon HD 320

▲ Minimum viscosity index of 130. Consult lubricant supplier/manufacturer for maximum operating temperature.
■ Kinematic viscosity in units of mm^2/s is equivalent to cSt (centistokes).
● Gear drives NOT equipped with internal backstop may widen the ambient tempeature range to -18° to +125°F (-28° to +52°C).
♦ DO NOT use in drives equipped with internal backstop.

TABLE 6C — Synthetic PAO (Polyalphaolefin) Micropitting Resistant Lubricants ▲♦

ISO Viscosity Grade	32	68	150	220 ●	320
AGMA Viscosity Grade	0	2	4	5	6
Viscosity cSt @ 40°C ■	28.8-35.2	61.2-74.8	135-165	198-242	288-352
Viscosity SSU @ 100°F	134-164	284-347	626-765	918-1122	1335-1632
Manufacturer	**Lubricant Name**	**Lubricant Name**	**Lubricant Name**	**Lubricant Name**	**Lubricant Name**
Chevron / Texaco / Caltex	- - -	- - -	- - -	- - -	Pinnacle WM 320
Exxon Mobil / Esso	- - -	- - -	- - -	- - -	Mobil SHC Gear 320 WT
Kluber Lubrication	- - -	- - -	Klubersynth GEM 4 N 150	Klubersynth GEM 4 N 220	Klubersynth GEM 4 N 320
Petro-Canada Lubricants	- - -	- - -	- - -	- - -	Harnex 320
Phillips 66 / Conoco / 76 Lubricants / Kendall	- - -	- - -	- - -	- - -	Syncon WTL 320
Whitmore Manufacturing Company	- - -	- - -	Decathlon F 150	Decathlon F 220	Decathlon F 320

▲ Minimum viscosity index of 130. Consult lubricant supplier/manufacturer for maximum operating temperature.
■ Kinematic viscosity in units of mm^2/s is equivalent to cSt (centistokes).
● Gear drives NOT equipped with internal backstop may widen the ambient tempeature range to -18° to +125°F (-28° to +52°C).
♦ DO NOT use in drives equipped with internal backstop.

© Rexnord Corporation. All Rights Reserved.

PETROLEUM LUBRICANTS — In the absence of oil analysis, change gear oils every 6 months or 2500 operating hours, whichever occurs first. Change oil more frequently when gear drives operate in extremely humid, chemical or dust laden atmospheres. In these cases, lubricants should be changed every 3 to 4 months or 1500 to 2000 hours. If the drive is operated in an area where temperatures vary with the seasons, change the oil viscosity grade to suit the temperature, refer to Table 3. Lubricant suppliers can test oil from the drive periodically and recommend economical change schedules.

SYNTHETIC LUBRICANTS — In the absence of oil analysis, synthetic lube change intervals can be extended to 8000 hours depending upon operating temperatures. Laboratory analysis is recommended for optimum lubricant life and drive performance. Change lube with change in ambient temperature, if required. Refer to Table 4.

Falk GMax 6000 change interval can be up to 15,000 hours. It has broad temperature range so seasonal oil changes are generally not needed. The condition of GMax must be monitored to maintain lubricant properties and cleanliness.

GREASE-LUBRICATED SEALS

All drives are furnished with grease purged seals which minimize the entry of contaminants and abrasive dusts into the drive. Drives are shipped with NLGI #2 grade grease in the seal housing cavities unless otherwise specified.

Whenever changing oil in the drive, purge the seals with one of the NLGI #2 grade greases listed in Table 7.

TABLE 7 — Conventional NLGI #2 Grade Grease ▲ for Grease Purged Seals
0° to +200°F (-18° to +93°C)

Manufacturer	EP Grease ■	Grease Without EP Additives
Chevron / Texaco / Caltex	Multifak EP 2	- - -
Citgo Petroleum Corp.	Lithoplex RT 2 Premium Lithium EP 2	- - -
ExxonMobil / Esso	Mobilux EP 2	Unirex N2
Petro-Canada Lubricants	Precision General Purpose EP2	Precision XL EMB Grease Precision Synthetic EMB
Phillips 66 / Conoco / 76 Lubricants / Kendall	Multiplex Red	- - -
Shell Oil Co.	Gadus S1 V220-2	Gadus S2 V100 - 2
Total Lubricants USA / Keystone Div. Penwalt Corp.	Multis EP 2	Multis 2

▲ Not suitable for food grade applications.
■ Caution: Do not use EP grease in external backstop purged seals.

Grease application or re-lubrication should be done at temperatures above 20°F (-7°C). If grease must be applied at cooler temperatures consult lubricant supplier for recommendations.

Depending upon the degree of contamination, it may be necessary to purge contaminated grease from seals more often (at least every 3 to 6 months). Slowly pump fresh bearing grease through the seal, **WITH HAND GREASE GUN,** until fresh grease flows out along the shaft. Wipe off purged grease.

WARNING: *Greases in Table 7 contain harmful substances not allowed in the food processing industry. If grease could contaminate the product, as in the food and drug industries, the grease originally supplied with gear drive must be removed and replaced with grease listed in Table 14. Refer to gear drive assembly/disassembly instructions. Simply purging grease with grease gun will not remove all grease and cross-contamination will likely occur. Grease registered as H1 by NSF, National Sanitation Foundation, is suitable for food processing applications.*

STORED & INACTIVE GEAR DRIVES

Refer to Section II (Drive Service and Repair) for details on stored & inactive gear drives.

© Rexnord Corporation. All Rights Reserved.
Rexnord
3001 W. Canal St., Milwaukee, WI 53208-4200 USA
Telephone: 414-342-3131 Fax: 414-937-4359 www.rexnord.com

FOOD GRADE LUBRICANTS

Guidance for selecting petroleum-based and synthetic-based food grade lubricants are shown below in Table 8. For general lubrication guidelines, refer to the first part of the "Lubrication Recomendation" Section.

FOOD GRADE LUBRICANT SELECTION PROCESS

1. Refer to Table 9 or 10 for proper lubricant viscosity grade based on ambient temperature range.
2. Refer to Table 8 for summary of food grade lubricant type.
3. Using proper food grade lubricant table and viscosity grade, select desired lubricant manufacturer name.
4. Refer to Table 2 for approximate oil capacity to purchase.

TABLE 8 — Summary of Food Grade Lubricants and Greases

Petroleum-Based	
R & O Inhibited See Table 11A	Extreme Pressure (EP) ♦ See Table 11B
Synthetic Lubricant, Polyalphaolefin Type (PAO)	
R & O Inhibited See Table 12A	Extreme Pressure (EP) ♦ See Table 12B
Synthetic Lubricant, Polyalkylene Glycol Type (PAG)	
Extreme Pressure (EP) ♦ See Table 13	
Food Grade Grease	
See Table 14	

♦ DO NOT use in drives equipped with internal backstop.

FOOD GRADE LUBRICANTS (TABLES 11A, 11B, 12A, 12B, 13 & 14) — Food grade lubricants are a class of lubricants registered as H1 by NSF, National Sanitation Foundation. They contain base stock and additives which comply with Food and Drug Administration Title 21 CFR 178.3570 regulations for lubricants with incidental food contact. Base stock can be petroleum oil or different types of synthetic lubricant. Food grade lubricants are not same as biodegradable or environmentally friendly lubricants.

Rust and corrosion inhibitors used to protect gear drive during shipment are not qualified as food grade fluids. Flush out inhibitor oil before filling with food grade lubricant.

Tables 11A, 11B, 12A, 12B, 13 & 14 list food grade lubricants that have performance properties meeting Rexnord/Falk specifications. They are not exclusive recommendations but serve as a guide for making proper lubricant selections.

CLIMATE CONDITIONS — Ambient temperature in immediate vicinity of gear drive is very important for determining viscosity grade. Table 9 provides viscosity grade selections for petroleum-based lubricants. See Table 10 for synthetic lubricants.

TABLE 9 — Viscosity Grade Recommendations For Food Grade Petroleum-Based Lubricants

Ambient Temperature Range	+30° to +90°F (-1° to +32°C)	+70° to +125°F (+21° to +52°C)
ISO Viscosity Grade	220	320
AGMA Viscosity Grade	5	6

Polyalkylene glycols (PAG) are another class of synthetic lubricants. They have similar performance properties as PAO synthetics - low pour point, stable at elevated temperatures, and high viscosity index. PAG's have exceptional tolerance to water contamination.

WARNING: *Polyalkylene glycols (PAG's) are not compatible with petroleum mineral oil or PAO synthetic lubricants and must not be topped off with either lubricant. In addition, petroleum mineral oils or PAO synthetic lubricants must not be used to top off systems containing PAG's. Do not use PAG's in gear drives with painted interior housing walls unless paint compatibility is checked. Compatibility with oil seals and gasket materials must be checked prior to use. PAG lubricants are not compatible with polycarbonate sight glass. Use glass sight glass.*

CAUTION: EXTREME PRESSURE (EP) LUBRICANTS & INTERNAL BACKSTOPS — *Do no use EP lubricants in drives equipped with internal cartridge type backstops. These lubricants are listed in Tables 11B, 12B & 13.*

LUBRICANT ANALYSIS AND CHANGES

OIL ANALYSIS REPORT (FOOD GRADE) — Checking oil condition at regular intervals is recommended. Analyze oil samples approximately every 1000 hours for food grade petroleum lubricants or every 3000 hours for food grade synthetic lubricants. In the absence of more specific limits, the guidelines listed below may be used to indicate when to change food grade lubricants:

1. Water content is greater than 500 ppm (parts per million) (0.05%).
2. Iron content exceeds 150 ppm.
3. Silicon (dust/dirt) exceeds 25 ppm, above reference sample from new oil container.
4. Copper content exceeds 75 ppm.
5. TAN (Total Acid Number) 50% increase above reference sample from new oil container.
6. Viscosity changes more than ±15%.
7. Solid particle contamination code exceeds 25/22/18 for particle sizes ≥4/≥6/≥14 microns, respectively per ISO 4406.

TABLE 10 — Viscosity Grade Recommendations For Food Grade Synthetic Lubricants

Ambient Temperature Range	Cold Climates		Normal Climates		
	–30° to +10°F (–34° to –12°C)	–15° to +50°F (–26° to +10°C)	0° to +80°F (–18° to +27°C)	+10° to +125°F ▲ (–12° to +52°C)	+20° to +125°F (–7° to +52°C)
ISO Viscosity Grade	32	68	150	220	320
AGMA Viscosity Grade	0	2	4	5	6

▲ Gear drives **NOT** equipped with internal backstop may widen the ambient temperature range to -18° to +125°F (-28° to +52°C).

© Rexnord Corporation. All Rights Reserved.

TABLE 11A — Food Grade Petroleum-Based R & O (Rust & Oxidation) Inhibited Lubricants — NSF (National Sanitation Foundation) H1 Registered

Maximum operating temperature of lubricants 200°F (93°C)

ISO Viscosity Grade	220	320
AGMA Viscosity Grade	5	6
Viscosity cSt @ 40°C ▲	198-242	288-352
Viscosity SSU @ 100°F	918-1122	1335-1632
Manufacturer	**Lubricant Name**	**Lubricant Name**
Bel-Ray Company, Inc.	No-Tox Gear Oil ISO 220	No-Tox Gear Oil ISO 320
Kluber Lubrication	---	---
Lubriplate Lubricants Co.	Lubriplate FMO 1100-AW	Lubriplate FMO 1700-AW

▲ Kinematic viscosity in units of mm^2/S is equivalent to cSt (centistokes)

TABLE 11B — Food Grade Petroleum-Based EP (Extreme Pressure) Lubricants ♦ — NSF (National Sanitation Foundation) H1 Registered

Maximum operating temperature of lubricants 200°F (93°C)

ISO Viscosity Grade	220	320
AGMA Viscosity Grade	5	6
Viscosity cSt @ 40°C ▲	198-242	288-352
Viscosity SSU @ 100°F	918-1122	1335-1632
Manufacturer	**Lubricant Name**	**Lubricant Name**
Petro-Canada	Purity FG EP 220	Purity FG EP 320
Total Lubricants USA, Inc.	Nevastane EP 220	Nevastane EP 320

▲ Kinematic viscosity in units of mm^2/S is equivalent to cSt (centistokes)

♦ DO NOT use in drives equipped with internal backstop.

TABLE 12A — Food Grade Synthetic PAO (Polyalphaolefin) R & O (Rust & Oxidation) Inhibited Lubricants — NSF (National Sanitation Foundation) H1 Registered

Maximum operating temperature of lubricants 200°F (93°C)

ISO Viscosity Grade	32	68	150	220 ■	320
AGMA Viscosity Grade	0	2	4	5	6
Viscosity cSt @ 40°C ▲	28.2-35.2	61.2-74.8	135-165	198-242	288-352
Viscosity SSU @ 100°F	134-164	284-347	626-765	918-1122	1335-1632
Manufacturer	**Lubricant Name**	**Lubricant Name**	**Lubricant Name**	**Lubricant Name**	**Lubricant Name**
ExxonMobil	Mobil SHC Cibus 32	Mobil SHC Cibus 68	Mobil SHC Cibus 150	Mobil SHC Cibus 220	Mobil SHC Cibus 320
Kluber Lubrication	Kluberoil 4 UH1 N 32	Kluberoil 4 UH1 N 68	Kluberoil 4 UH1 N 150	Kluberoil 4 UH1 N 220	Kluberoil 4 UH1 N 320
Lubriplate Lubricants Co.	Lubriplate SFGO Ultra 32	Lubriplate SFGO Ultra 68	Lubriplate SFGO Ultra 150	Lubriplate SFGO Ultra 220	Lubriplate SFGO Ultra 320
Total Lubricants USA, Inc.	Nevastane SL 32	Nevastane SL 68	Nevastane SL 150	Nevastane SL 220	Nevastane SL 320

▲ Kinematic viscosity in units of mm^2/S is equivalent to cSt (centistokes)

■ Gear drives NOT equipped with internal backstop may widen ambient temperature range to -18° to +125°F (-28° to +52°C).

TABLE 12B — Food Grade Synthetic PAO (Polyalphaolefin) EP (Extreme Pressure) Lubricants ♦ — NSF (National Sanitation Foundation) H1 Registered

Maximum operating temperature of lubricants 200°F (93°C)

ISO Viscosity Grade	32	68	150	220 ■	320
AGMA Viscosity Grade	0	2	4	5	6
Viscosity cSt @ 40°C ▲	28.8-35.2	61.2-74.8	135-165	198-242	288-352
Viscosity SSU @ 100°F	134-164	284-347	626-765	918-1122	1335-1632
Manufacturer	**Lubricant Name**	**Lubricant Name**	**Lubricant Name**	**Lubricant Name**	**Lubricant Name**
Petro-Canada	---	---	---	Purity FG Synthetic EP 220	---

▲ Kinematic viscosity in units of mm^2/S is equivalent to cSt (centistokes)

■ Gear drives NOT equipped with internal backstop may widen ambient temperature range to -18° to +125°F (-28° to +52°C).

♦ DO NOT use in drives equipped with internal backstop.

© Rexnord Corporation. All Rights Reserved.
Rexnord
3001 W. Canal St., Milwaukee, WI 53208-4200 USA
Telephone: 414-342-3131 Fax: 414-937-4359 www.rexnord.com

TABLE 13 — Food Grade Synthetic PAG (Polyalkylene Glycol) EP (Extreme Pressure) Lubricants♦ — NSF (National Sanitation Foundation) H1 Registered

Maximum operating temperature of lubricants 200°F (93°C)
See Warning Note below.

ISO Viscosity Grade	32	68	150	220 ■	320
AGMA Viscosity Grade	0	2	4	5	6
Viscosity cSt @ 40°C ▲	28.8-35.2	61.2-74.8	135-165	198-242	288-352
Viscosity SSU @ 100° F	134-164	284-347	626-765	918-1122	1335-1632
Manufacturer	Lubricant Name	Lubricant Name	Lubricant Name	Lubricant Name	Lubricant Name
Exxon Mobil	---	---	Glygoyle 150	Glygoyle 220	Glygoyle 320
Kluber Lubrication	---	---	Klubersynth UH1 6-150	Klubersynth UH1 6-220	Klubersynth UH1 6-320
Lubriplate	---	---	PGO-FGL Synthetic Gear Oil 150	PGO-FGL Synthetic Gear Oil 220	PGO-FGL Synthetic Gear Oil 320

WARNING: *Polyalkylene glycol (PAG) lubricants are not compatible with petroleum mineral oils or PAO synthetic lubricants. PAG's must not be mixed or used to top off either petroleum mineral oils or PAO synthetic lubricants.*

▲ Kinematic viscosity in units of mm^2/s is equivalent to cSt (centistokes).
■ Gear drives NOT equipped with internal backstop may widen the ambient temperature range to -18° to +125°F (-28° to +52°C).
♦ DO NOT use in drives equipped with internal backstop.

Guidelines for when to change food grade polyalkylene glycol type lubricant are:

1. Water content is greater than 3%.
2. Iron content exceeds 150 ppm.
3. Silicon (dust/dirt) exceeds 25 ppm, above reference sample from new oil container.
4. Copper content exceeds 75 ppm.
5. Viscosity changes more than ±15%.
6. Solid particle contamination code 25/22/18 per ISO 4406.

Laboratory analysis is recommended for optimum lubricant life and gear drive performance.

PETROLEUM LUBRICANTS (FOOD GRADE) — In the absence of oil analysis, change gear oils every 6 months or 2500 operating hours, whichever occurs first. Change oil more frequently when gear drives operate in extremely humid, chemical or dust laden atmospheres. In these cases, lubricants should be changed every 3 to 4 months or 1500 to 2000 hours. If the drive is operated in an area where temperatures vary with the seasons, change the oil viscosity grade to suit the temperature, refer to Table 9. Lubricant suppliers can test oil from the drive periodically and recommend economical change schedules.

SYNTHETIC LUBRICANTS (FOOD GRADE) — In the absence of oil analysis, synthetic lube change intervals can be extended to 8000 hours depending upon operating temperatures. Laboratory analysis is recommended for optimum lubricant life and drive performance. Change lube with change in ambient temperature, if required. Refer to Table 10.

GREASE-LUBRICATED SEALS

All drives are furnished with grease purged seals which minimize the entry of contaminants and abrasive dusts into the drive. Drives are shipped with NLGI #2 grade grease in the seal housing cavities unless otherwise specified.

Whenever changing oil in the drive, purge the seals with one of the NLGI #2 grade greases listed in Table 14. Depending upon the degree of contamination, it may be necessary to purge contaminated grease from seals more often (at least every 3 to 6 months). Slowly pump fresh bearing grease through the seal, **WITH HAND GREASE GUN,** until fresh grease flows out along the shaft. Wipe off purged grease.

If grease could contaminate the product, as in the food and drug industries, the grease originally supplied with gear drive must be removed and replaced with grease listed in Table 14. Refer to gear drive assembly/disassembly instructions. Simply purging grease with grease gun will not remove all grease and cross-contamination will likely occur. Grease registered as H1 by NSF, National Sanitation Foundation, is suitable for food processing applications.

TABLE 14 — Food Grade Grease ▲ for Grease Purged Seals, NLGI #2 Grade

0° to +200°F (-18° to +93°C)

Manufacturer	Lubricant
Bel-Ray Company, Inc.	No-Tox HD Grease 2
Chevron USA, Inc. (Texaco/ Caltex)	Chevron FM ALC EP 2
Exxon Mobil	Mobil SHC Polyrex 462
Kluber Lubrication	Klubersynth UH1 14-222
Lubriplate	Lubriplate FGL-2
Total Lubricants USA, Inc.	Nevastane HT/AW 2
Petro-Canada	Purity FG
Phillips 66 / Conoco / 76 Lubricants / Kendall	Food Machinery Grease 2

▲ NSF (National Sanitation Foundation) H1 Registered.

Grease application or re-lubrication should be done at temperatures above 20°F (-7°C). If grease must be applied at cooler temperatures consult lubricant supplier for recommendations.

STORED & INACTIVE GEAR DRIVES

Prior to shipment from the factory, all Rexnord enclosed gear drives are protected internally against corrosion with a rust preventative oil. A vapor phase rust inhibitor may also be added.

WARNING*: These corrosion inhibitors are not H1 registered with the NSF (National Sanitation Foundation) as suitable for food processing applications. When Food Grade Lubricants are to be used, it is the end users responsibility to properly flush and prepare the drive for Food Grade service. Contact the lubricant manufacturer for specific information and flushing procedures.*

© Rexnord Corporation. All Rights Reserved.

Backstop Installation — Sizes 5407 & 5415

INTRODUCTION

The following instructions apply to INSTALLATION ONLY of internal backstops in horizontal drives, sizes 5407 thru 5415 double reduction.

***WARNING**: Axial float measurement of the high-speed shaft must be within the following range: .001 inch preload to .001 inch float. Refer to Section III (Drive Reassembly) Item 6 (Bearing Adjustment) for proper instructions on bearing settings and measuring axial float. If backstop is to be replaced, the high-speed shaft must also be replaced. Refer to instructions regarding high-speed shaft replacement in Section III.*

Remove all external loads from system before servicing drive or accessories, and lock out starting switch of prime mover.

LUBRICANT

PETROLEUM-BASED LUBRICANTS — Use R & O type lubricants which do not contain extreme pressure (EP) additives if the drive is equipped with an internal backstop.

***CAUTION**: Do not use EP lubricants or lubricant formulations including sulfur, phosphorus, chlorine, lead derivatives, graphite or molybdenum disulfides in drives equipped with internal backstops. Refer to Appendix A for proper selection of lubricants. Use of an improper lubricant will contribute to premature wear or malfunction of the backstop.*

SYNTHETIC LUBRICANTS — Synthetic lubricants of the polyalphaolefin type may be used in drives with internal backstops.

Before installing backstop, check direction of free rotation (overrunning) indicated by the arrow etched on each side of the backstop.

BACKSTOP APPLICATION

Backstops are designed to prevent reverse rotation or backrun without backlash in applications such as conveyors, bucket elevators, fans, rotary pumps and kilns. Backstops are not approved for use on systems that are designed for handling of people such as elevators, manlifts, ski tows and ski lifts. DO NOT use a backstop as a substitute for a brake.

INDEXING

DO NOT use the backstop for indexing applications. The backstop is designed to prevent reverse rotation five times or less in eight hours, with one minute or more in overrunning direction between backstopping load applications. If backstopping operations are more frequent, or the time between operations is less than one minute, the backstop is classified as an indexing device and must be referred to the Factory.

INSTALLATION

1. Drain oil from the drive. If a backstop is being added to an existing drive, for size 5415, remove and discard the original end cover, Ref. #18; fasteners, Ref. #37; and gasket, Figure 1. For size 5407, remove and discard the original end cover, Ref. #18; gasket and four short studs. Install longer studs, Ref. #38, provided with the kit. The hex nuts removed from original shaft cover assembly will be required for reassembly.

Figure 1

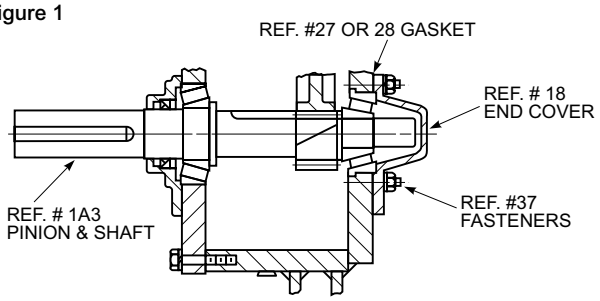

2. If existing backstop is being replaced for sizes 5407 & 5415J14, remove cover, Ref. #19; backstop, Ref. #5A1; spacer, Ref. #5A2; and gasket from backstop cage. For size 5415J25, remove cover, Ref. #19; gasket and backstop cage, Ref. #20, from housing. Remove two retaining rings from bore of backstop cage. Remove backstop, Ref #5A1, from cage. For all drive sizes, note direction of rotation of high-speed shaft for proper reassembly. Refer to Section II for shaft and backstop inspection.
3. Remove backstop, Ref. #5A1, from the kit and wipe off excess lubricant.
4. **SIZE 5407 (FIGURE 2)** — Assemble backstop cage, Ref. #20, onto studs using one new .015" (0.381 mm) shim-gasket, Ref. #30, against the housing. Slide the spacer, Ref. #5A2, into the backstop cage up against the bearing cup. Apply oil to the O.D. of the high-speed shaft backstop journal and the sprags inside of the backstop. Insert key Ref #5A4 into backstop keyway. Align the key with the keyway in the backstop cage and carefully slide the backstop into the bore while slowly rotating the high-speed shaft. The shaft will only rotate in one direction. DO NOT FORCE OR HAMMER; this may damage the shaft or misalign the sprags.

   Check operation of backstop by turning high-speed shaft in required direction of rotation by hand. If the shaft does not rotate in the required direction, remove backstop, reverse it and reinsert it into bore as instructed above. Proceed to Step 9.

© Rexnord Corporation. All Rights Reserved.
Rexnord
3001 W. Canal St., Milwaukee, WI 53208-4200 USA
Telephone: 414-342-3131 Fax: 414-937-4359 www.rexnord.com

Figure 2

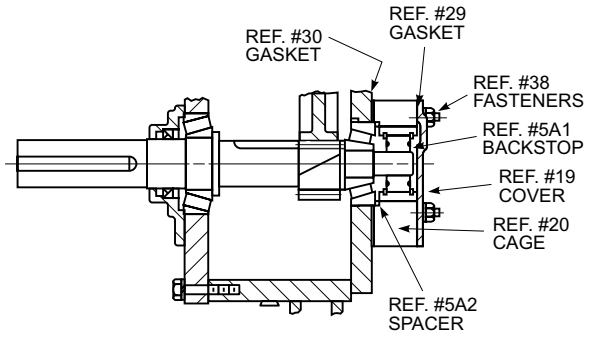

5. **SIZE 5415** — Install dowel into cage.
6. **SIZE 5415J14 (FIGURE 3)** — Apply oil to the O.D. of the high-speed shaft backstop journal and the sprags inside of the backstop. Insert key, Ref #5A4, into backstop keyway. Align the key with the keyway in the backstop cage and carefully slide the backstop into cage, allowing the backstop to protrude 0.25" (6.4 mm). Coat spacer with grease to assist in holding the spacer against the backstop for assembly and slide into housing side of cage. This spacer will fit between bearing cup and backstop.

Figure 3

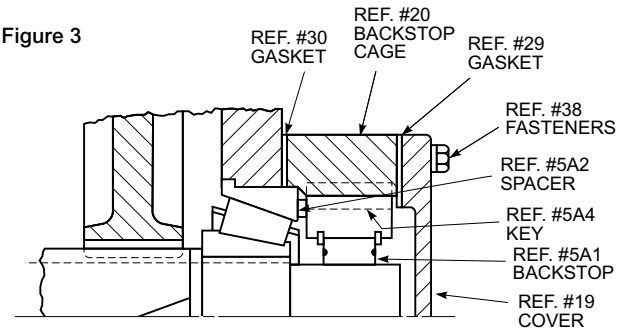

7. **SIZE 5415J25 (FIGURE 4)** — Install one (1) retaining ring in groove on backstop. Apply oil to the O.D. of the high-speed shaft backstop journal and the sprags inside of the backstop. Insert key, Ref #5A4, into backstop keyway. Align the key with the keyway in the backstop cage and carefully slide the backstop into cage. Install second retaining ring on backstop to hold it in the cage.

Figure 4

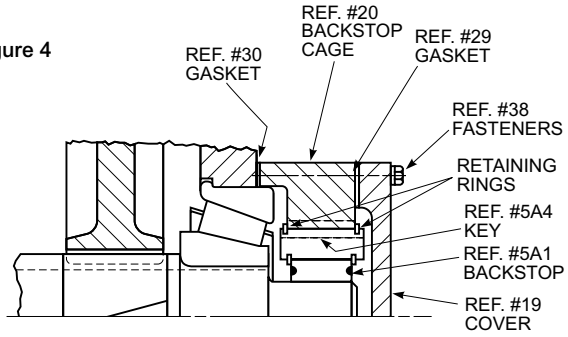

8. **SIZE 5415 (ALL TYPES)** — Place one new .015" (0.381 mm) shim-gasket, Ref. #30, against housing. NOTE: Position gaskets, Ref. #30 and spacer, Ref. #5A2, so that the drain back hole is open. Blocking the drain back hole will not allow oil to lubricate backstop sufficiently and could lead to premature wear, resulting in backstop or drive failure. Carefully install the backstop/cage assembly on the oiled shaft extension while slowly rotating the high-speed shaft. The shaft will only rotate in one direction.

   DO NOT FORCE OR HAMMER; this may damage the shaft or misalign the sprags.

   Check operation of backstop by turning high-speed shaft in required direction of rotation by hand. If the shaft does not rotate in the required direction, remove backstop, reverse it and reinstall as instructed in preceding steps.
9. Rotate high-speed shaft in the required direction of rotation and then reverse the rotation to lock up the backstop. Observe the position of the sprags. All Sprags must be engaged and lay in the same relative position around the shaft. If the sprags are not uniformly positioned, lightly tap the backstop cage to centralize all the sprags around the shaft and cage. If sprags cannot be uniformly positioned in this manner, remove the backstop and run a finger around the sprags in the overrunning direction. Reinstall backstop as instructed in the preceding steps.

   Check the position of the sprags several times by overrunning and locking the sprags. If all sprags move uniformly, hold the backstop in the locked position and proceed to the next assembly step.
10. Install backstop cover, shim-gasket and fasteners, Ref. #19, 29 & 38. NOTE: Position gaskets, Ref. #30, and spacer, Ref. #5A2, so that the drain back hole is open. Blocking the drain back hole will not allow oil to lubricate backstop sufficiently and could lead to premature wear, resulting in backstop or drive failure. Cross-tighten fasteners to 70 lb-ft (95 Nm) for size 5407, and 28 lb-ft (38 Nm) for size 5415.
11. Clean housing surface for rotation and warning labels. Affix the rotation indicator next to high speed-shaft extension to indicate the free direction of rotation, Figure 5. Fill drive to oil level specified in Section I, with oil specified in Appendix A. Check motor for correct rotation before completing connection to drive.

Figure 5

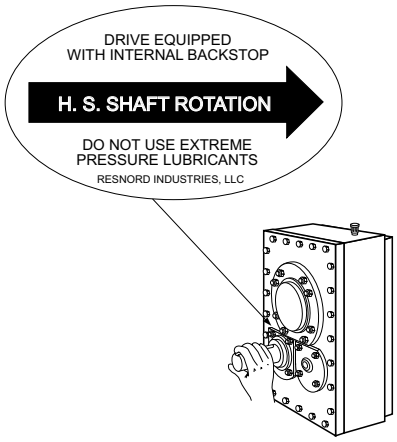

© Rexnord Corporation. All Rights Reserved.

Backstop Installation — Sizes 5507 & 5608

INTRODUCTION

The following instructions apply to INSTALLATION ONLY of externally mounted backstop on the high-speed-shaft of a horizontally mounted sizes 5507 & 5608 double reduction drives. This backstop is sold only as an accessory for new or existing Falk drives. Do not use for any other application without written approval from Rexnord Industries.

Backstops must not be dismantled or repaired. Backstops are nonserviceable components. Replace damaged backstops with new backstops from .

Remove all external loads from system before servicing drive or accessories and lock out starting switch of prime mover.

BACKSTOP APPLICATION

Backstops are designed to prevent reverse rotation or backrun without backlash in applications such as conveyors, bucket elevators, fans, rotary pumps and kilns. Backstops are not approved for use on systems that are designed for handling of people such as elevators, manlifts, ski tows and ski lifts. DO NOT use a backstop as a substitute for a brake.

INDEXING

DO NOT use the backstop for indexing applications. The backstop is designed to prevent reverse rotation five times or less in eight hours, with one minute or more in overrunning direction between backstopping load applications. If backstopping operations are more frequent, or the time between operations is less than one minute, the backstop is classified as an indexing device and must be referred to the Factory.

***WARNING**: The backstop and normal associated equipment (shaft, pulleys, etc.) involve moving parts; therefore, consult local, state, OSHA and ANSI safety codes for proper guarding of rotating members and possible pinch points.*

If backstop slippage occurs, DO NOT operate. Install a new backstop before resuming operation.

LUBRICANT (GREASE) — BACKSTOP P/N 2924040 and 2924041

Unless specified otherwise, the backstop is furnished filled with grease suitable for operation in an ambient temperature range of -30º to +125ºF (-34º to +52ºC).

Consult Rexnord for lubrication recommendations when ambient temperatures are lower than -30ºF (-34ºC) or higher than 125ºF (52ºC), or when drives are operating in extremely humid, chemical, or dust laden atmospheres.

***CAUTION**: Do not use greases with molybdenum disulfide or other EP additives in external backstops. Use of an improper grease will contribute to premature wear or malfunction of the backstop.*

Relubricate the backstop every 3 months (2 weeks in severe operating conditions). To relubricate, select and clean one grease fitting and pump grease into the backstop until fresh grease appears at both seals. Refer to manufacturer's service manual (supplied with drive) for detailed maintenance instructions and recommended lubricants.

LUBRICANT (SYNTHETIC OIL — BACKSTOP P/N 2921858 AND 2921859

***WARNING**: Air vent must be installed before operating drive.*

NOTE: Unless specified otherwise, the backstop is furnished filled with synthetic oil suitable for operation in an ambient temperature range of -55ºF to +120ºF (-48ºC to +49ºC).

Consult the Factory for lubrication recommendations when ambient temperatures are higher than 120ºF (49ºC), or when drives are operating in extremely humid, chemical, or dust laden atmospheres.

***CAUTION**: Do not use lubricant with molybdenum disulfide or other EP additives in external backstops. Use of an improper lubricant will contribute to premature wear or malfunction of the backstop.*

Relubricate the backstop every 6 months. Refer to manufacturer's service manual (supplied with drive) for detailed maintenance instructions and recommended lubricants.

INSTALLATION

1. Clean the backstop bore and the shaft on which the backstop will be mounted. Remove and clean shaft key and set aside.

   ***CAUTION**: Refer to direction of rotation arrow on backstop. Before installation, make certain that the direction of rotation is correct. Check backstop size on nameplate and make certain it is correct.*

2. Attach anchor bracket, Ref. #67, to housing using fasteners provided with kit, Figure 6. Tighten fasteners for size 5507 to 68.8 lb-ft (94Nm) and size 5608 to 245 lb-ft (332 Nm).
3. Secure backstop, Ref. #5A1, to torque arm, Ref. #68, using fasteners provided with kit, Figure 6. Tighten fasteners to 22 to 27 lb-ft (30 to 37 Nm). Note: Backstop will fit inside counterbore of torque arm. Oil filled backstops only.

Figure 6

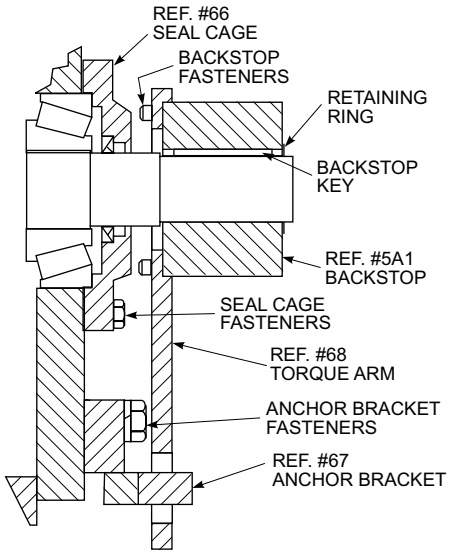

© Rexnord Corporation. All Rights Reserved.
Rexnord
3001 W. Canal St., Milwaukee, WI 53208-4200 USA
Telephone: 414-342-3131 Fax: 414-937-4359 www.rexnord.com

When assembling torque arm to clutch, clutch should be position so that the fill/vent fitting can be located nearest to the top when backstop is mounted on the shaft. Customer to remove (1) drain plug and replace with fill/vent plug (wired to torque arm) at start up.

4. Install backstop key into keyway on backstop shaft extension.
5. Align key with keyway in bore of backstop and slide backstop/torque arm assembly onto shaft. Apply pressure to end face of the backstop inner race only. Pressure applied to the outer race could preload the backstop bearings, resulting in a premature failure.

   The backstop must slip onto shaft. DO NOT FORCE OR HAMMER backstop on shaft. Allow for clearance between tab on anchor bracket and hole in torque arm so that the tab can pass through the hole, Figure 7.
6. Install retaining ring on backstop shaft extension to hold backstop assembly on shaft. NOTE: Clearance between backstop and retaining ring allows for backstop assembly to float axially on shaft.

Figure 7

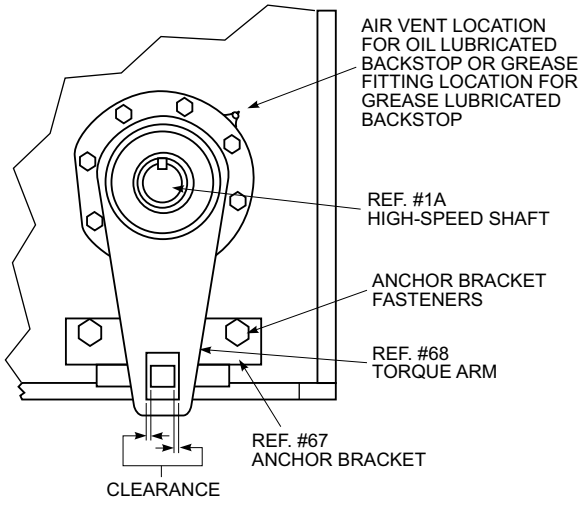

7. Check free and locked rotation of backstop by turning the high-speed shaft in required direction of rotation by hand. If the shaft does not rotate in the required direction, remove backstop assembly from shaft, disassemble backstop, Ref. #5A1, from torque arm, Ref. #68, and reverse backstop. Reassemble backstop assembly as instructed in preceding steps.
8. Clean housing surface for rotation and warning labels. Affix the rotation indicator next to high-speed shaft extension to indicate the free direction of rotation, as in Figure 8. Check motor for correct rotation before completing connection to drive.

Figure 8

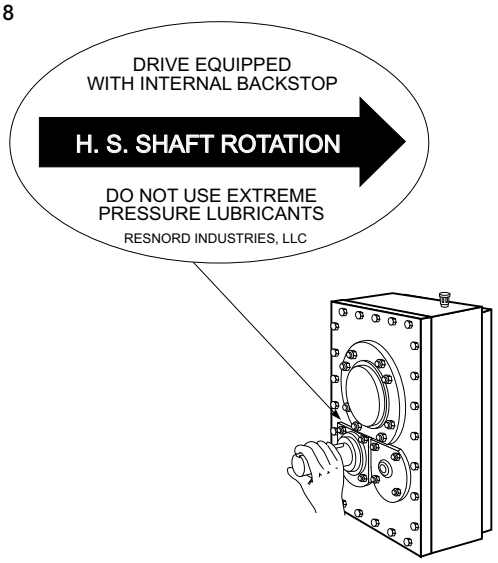

© Rexnord Corporation. All Rights Reserved.

TA Removal Tool

INTRODUCTION

The TA removal tool (patented) offers a positive method for removing a TA taper-equipped Quadrive from the driven shaft. This method uses the torque multiplying characteristic of the drive to separate the drive from the bushing and driven shaft.

The removal tool is available in kit form suitable for use with sizes 5407 thru 5608. The kit can be ordered from your Rexnord distributor by specifying **"TA Removal Kit - Part 0769407." NOTE**: Use of this tool requires a minimum axial clearance ("M" shown in Figure 1 and Table 1), from the seal cage stud.

***CAUTION**: DO NOT modify the tool in any way OR use it in another manner except to loosen the bushing nut as instructed herein.*

Figure 1

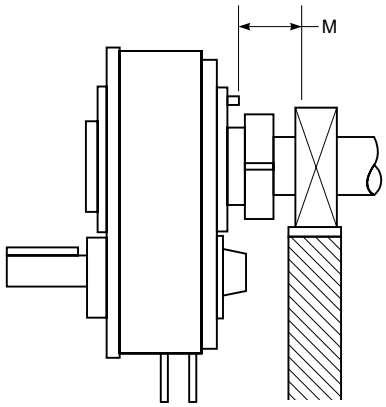

Table 1 — Minimum Tool Clearance

Drive Size	M Dimension — Inches (mm)
5407	5.12 (130)
5415	5.12 (130)
5507	5.38 (137)
5608	5.12 (130)

PREPARATION FOR REMOVAL

***WARNING**: Always "lock out" prime mover before working on the Quadrive.*

1. Quadrive shafts, high-speed and hollow, must be free to rotate.
   a. Remove any external load on the driven shaft.
   b. Remove belts from high speed-shaft sheave.
   c. Remove the backstop (if so equipped) when. Refer to Section II — Step 10, for backstop removal instructions.

   ***WARNING**: DO NOT disconnect the drive from its torque arm until the removal process is completed. In addition, the drive must be supported during removal process. Use a sling around the motor mount or as recommended in SECTION I, Step 6. Be sure to take up the slack in the sling before proceeding.*
2. Loosen the setscrew on the O.D. of the bushing nut. Remove the most convenient seal cage nut and lock washer from the stud. Figure 2.

Figure 2

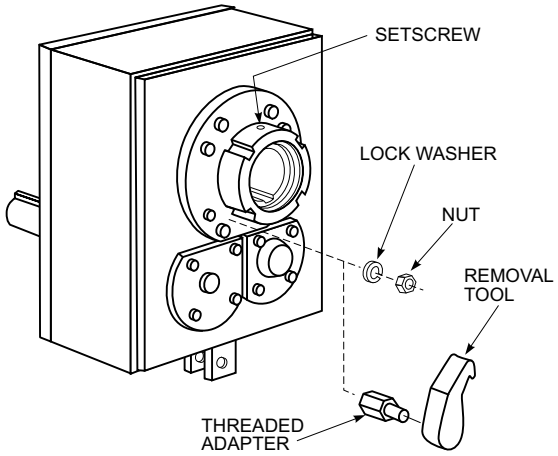

3. Select the proper adapter from the tool kit. (Adapters are marked with the Quadrive size and part number.) Thread the appropriate adapter onto the stud and apply tightening torque from Table 2.

Table 2 — Adapter Tightening Torque

Drive Size	Part Number	Torque lb-ft (Nm)
5407	2111960	108 (146)
5415	2111960	108 (146)
5507	2111961	120 (163)
5608	2111960	108 (146)

4. Mount the removal tool as illustrated in Figure 3 or 4. It is generally preferable to install the tool in a position where its weight will tend to keep it engaged into the nut. Rotate the high-speed shaft until the tool hook engages one of the slots in the nut.

© Rexnord Corporation. All Rights Reserved.
Rexnord
3001 W. Canal St., Milwaukee, WI 53208-4200 USA
Telephone: 414-342-3131 Fax: 414-937-4359 www.rexnord.com

Figure 3 SIZES 5407, 5415 & 5608

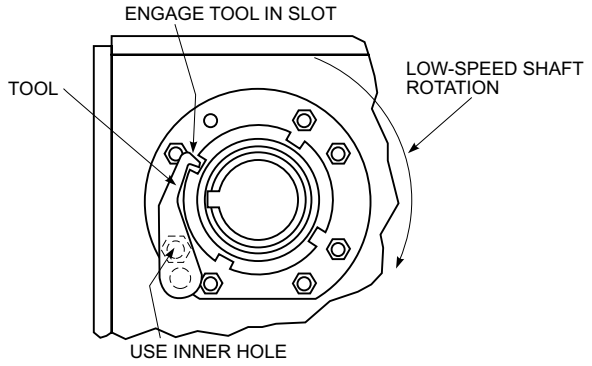

Figure 4 SIZE 5507

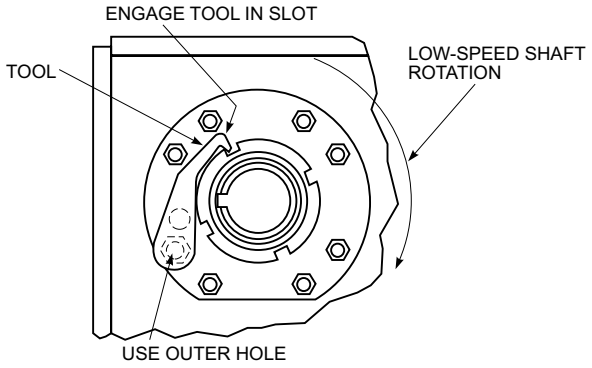

REMOVAL OF QUADRIVE

5. Use a spanner wrench to apply torque through the high-speed shaft keyway (Type J05 clockwise; Types J14 or J25 counter-clockwise) to loosen the bushing nut.

   WARNING*: Never use the prime mover to produce the torque needed. This could result in severe personal injury or damage to the equipment.*

   CAUTION*: To avoid damage to the drive or the removal tool, DO NOT exceed the H.S. shaft torque values listed in Table 3.*

   NOTE: The nut will rotate freely for approximately 180° as it moves from the locked to the removal position. Resistance will indicate that unseating is occurring. Turn until the nut and bushing are completely free. Now, prepare the drive for lifting by disconnecting the torque arm at the drive end.

6. **ALTERNATE METHOD** — Torque may be applied to the sheave or sprocket mounted on the high-speed shaft.

Table 3 — Maximum torque - High-Speed Shaft lb-ft (Nm)

DRIVE SIZE	Drive Reduction		
	J05	J14	J25
5407	843 (1143)	302 (410)	167 (226)
5415	902 (1224)	337 (456)	183 (249)
5507	. . .	372 (504)	205 (278)
5608	. . .	422 (572)	230 (312)

© Rexnord Corporation. All Rights Reserved.

Motor Mount Installation

INTRODUCTION

The Falk Equi-Poised Motor Mount is an all-steel weldment that bolts directly to the steel housing of Falk Shaft Mounted (Type JR), Flange Mounted (Type JF) and Screw Conveyor (Type JSC) Drives, as shown in Figure 1.

This modern design provides a simple means of tensioning V-belts or chains with adjusting screws. Motor base plates are available from the Factory predrilled for NEMA & IEC standard foot-mounted motors within the rated capacity of the drive.

Figure 1

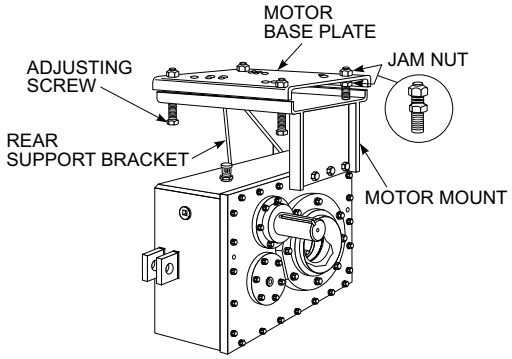

ASSEMBLY INSTRUCTIONS

From Figure 2, determine which assembly is required. Drives are shown assembled in the 3 o'clock position, high-speed shaft relative to low-speed shaft. They can also be mounted in the 6, 9 and 12 o'clock positions after the motor mounts are assembled.

***WARNING**: Remove all external loads from system before servicing drive or accessories.*
Consult applicable local and national safety codes for proper guarding of rotating members.

STANDARD ASSEMBLIES

Figure 2

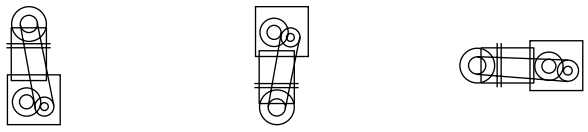

A3 (3 O'CLOCK **C3 (3 O'CLOCK** **D3 (3 O'CLOCK**

Letter = Motor Mount Position, Number = Drive H.S.S. Clock Position

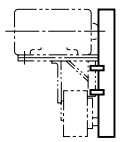

OSHA type guard when specified. Dimensions to suit components.

Refer to Appendix L for installation of Rexnord V-belt guards.

1. **ASSEMBLE MOTOR MOUNT BRACKET TO DRIVE**.

   Remove housing cover fasteners and attach motor mount bracket to housing using longer fasteners provided. Refer to Table 1 for fastener size and tightening torque.

2. **ASSEMBLE REAR SUPPORT BRACKET TO DRIVE**.

   Refer to Table 1 for fastener size and tightening torque.

   a. **SIZE 5407 ALL TYPES (FIGURE 3)** — Remove two hex nuts and lock washers from seal cage studs. Remove the two seal cage studs and replace them with the longer studs provided. Mounting position of drive and motor mount will determine which fasteners need to be removed. Using lock washers provided with motor mount and hex nuts previously removed, attach rear support bracket to drive, aligning holes in bracket with seal cage studs.

   b. **SIZES 5415JR & 5507JR (FIGURE 3)** — Remove appropriate hex nuts and lock washers from seal cage studs. Mounting position of drive and motor mount will determine which fasteners need to be removed. Using hex nuts and lock washers previously removed, attach rear support bracket to drive, aligning holes in bracket with seal cage studs.

   c. **SIZES 5415, 5507, & 5608JF (FIGURE 4)** — Attach rear support to flange using mounting fasteners furnished by user (furnished by Rexnord for size 5608JF).

   d. **SIZE 5608JR (FIGURE 3)** — Attach rear support bracket to seal cage pads using fasteners provided.

Figure 3 - Sizes: 5407 thru 5507JR, 5407JF & JSC, 5608JR

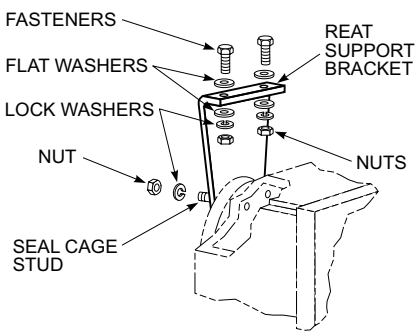

Figure 4 - Sizes: 5415 thru 5608JF

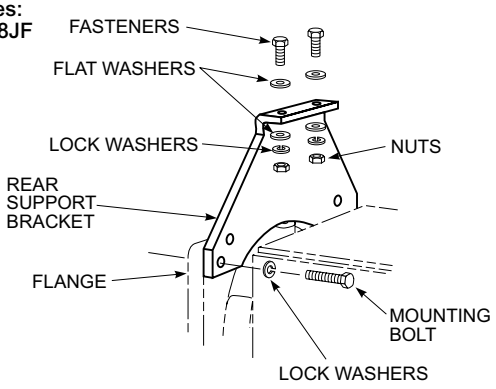

© Rexnord Corporation. All Rights Reserved.
Rexnord
3001 W. Canal St., Milwaukee, WI 53208-4200 USA
Telephone: 414-342-3131 Fax: 414-937-4359 www.rexnord.com

3. **ASSEMBLE SUPPORT BRACKET TO MOTOR MOUNT BRACKET** — Use the fasteners provided. Refer to Table 1 for fastener size and tightening torque.
4. **ASSEMBLE BASE PLATE TO MOTOR MOUNT BRACKET (FIGURE 1)** — Assemble adjusting screws to motor mount bracket and base plate with jam nuts above and below the base plate.
5. **MOUNT MOTOR** — Position motor on base plate so that all mounting holes are in alignment. Install and tighten motor fasteners.
6. **SPROCKET, PULLEY OR SHEAVE CONNECTION** — Mount power takeoffs as close to drive and motor housing as possible to avoid undue bearing load and shaft deflection. Align the high-speed shaft of drive square and parallel with motor shaft by placing a straightedge across the face of the sprockets or sheaves as illustrated. Check horizontal shaft alignment by placing one leg of a square against the face of the sheave or sprocket with the spirit level on the horizontal leg of the square.

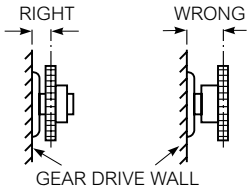

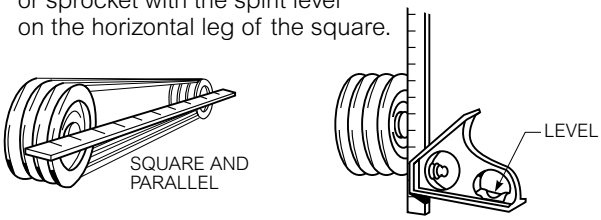

Adjustment of the belt or chain is accomplished by turning adjusting screws evenly. DO NOT over tighten belts or chains. Over tightening belts or chains reduces belt/chain and bearing life. When the required tension is reached, tighten adjusting screw jam nuts to torques listed in Table 1. Adjust chain tension to manufacturers' specifications. Adjust belts as follows:

The ideal belt tension is the lowest tension at which the belt will not slip under peak load conditions. Check belt tension frequently during the first 24 to 48 hours of run-in operation. Keep belts free from foreign material which may cause slippage. Inspect the V-belt drive periodically; retighten belts if they are slipping.

Table 1 — Fastener Size and Tightening Torque ▲

Drive Size	Motor Mount to Housing		Support to Seal Cage		Support to Motor Mount		Support to Flange		Adjusting Screws	
	Size	Torque lb-ft (Nm)	Size	Torque lb-ft (Nm)	Size	Torque lb-ft (Nm)	Size	Torque lb-ft (Nm)	Size	Torque lb-ft (Nm)
5407	.500-13UNC x 2.25	69 (94)	.750-10UNC	330 (447)	.500-13UNC x 1.75	69 (94)	.750-10UNC	330 (447)	1.250-7UNC ■	362 (491)
5415	.500-13UNC x 2.50	69 (94)	.750-10UNC	330 (447)	.500-13UNC x 1.75	69 (94)	1.250-7UNC ♦	1050 (1424)	1.250-7UNC ■	362 (491)
5507	.500-13UNC x 2.50	69 (94)	.875-9UNC	533 (723)	.500-13UNC x 1.75 ●	69 (94)	1.250-7UNC ♦	1050 (1424)	1.250-7UNC ■	362 (491)
5608	.750-10UNC x 3.25	245 (332)	.750-10UNC	330 (447)	.750-10UNC x 1.75	245 (332)	.750-10UNC x 2.00	245 (332)	1.250-7UNC	362 (491)

▲ All fasteners are Grade 5.
■ Size .625-11UNC x 6.00 fasteners are furnished with motor mount for select motor frame sizes. Tighten these fasteners to 60 lb-ft (81 Nm).
♦ Fasteners furnished by customer.
● Size .750-10UNC x 2.25 fasteners are furnished with motor mount for select motor frame sizes. Tighten these fasteners to 245 lb-ft (332 Nm).

© Rexnord Corporation. All Rights Reserved.

Vertical Standpipe Installation

INTRODUCTION

The following instructions apply to the installation of standpipe kits to standard drives mounted for vertical operation (high-speed shaft up or down). Drawings are representative of this series of drives and may not agree in exact detail with all drive sizes.

NOTE: Vertical shaft drives, when filled to the proper oil level, are completely full of oil.

HIGH-SPEED SHAFT DOWN — FIGURE 1

1. After installing the drive per the Owners Manual installation instructions, determine which of the upper side plug locations on the drive will provide the best location for the standpipe, observing clearance required to remove dipstick (Dimension D, Table 1). Discard the air vent. When the air vent location is not used for the standpipe, relocate the pipe plug from the selected standpipe location to the air vent location. Recoat pipe plug threads with Permatex #3 or equivalent sealant before reinstalling.
2. Coat all pipe threads of kitted parts with Permatex #3 or equivalent sealant.

Table 1 — Dimensions

Drive Size	Inches (mm)			
	A	B	C	D
5407	0.75 (19)	1.25 (32)	1.75 (44)	24.3 (617)
5415	0.90 (23)	1.40 (36)	1.90 (48)	21.3 (541)
5507	0.92 (23)	1.42 (36)	1.92 (49)	21.3 (541)
5608	1.03 (26)	1.53 (39)	2.03 (52)	20.6 (523)

Figure 1

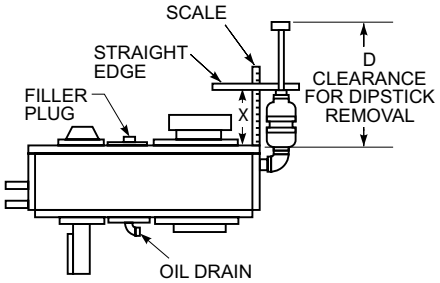

3. Assemble kitted parts to the drive as illustrated in Figure 1 and then secure the standpipe with an external support to maintain its vertical position.
4. Carefully measure Dimension X as illustrated in Figure 1.
5. From Table 1:

   X + A equals oil level “Full” mark.

   X + B equals oil level “Low” mark.

   X + C equals dipstick length.
6. Scribe Dimensions X + A and X + B on the dipstick as illustrated in Figure 1. Make measurements from the felt pad in the dipstick cap.
7. Lightly chisel permanent oil level marks on the scribed lines and cut the dipstick to the length marked. File end of dipstick smooth.
8. Install magnetic drain plug (furnished) in oil drain location.
9. Remove the oil filler plug. Add oil until the oil level reaches the “Full” mark on the dipstick. Coat the filler plug (not vented) with Permatex #3 or equivalent sealant and replace it.
10. Filler plug must always be removed to relieve entrapped air before checking oil level.

HIGH-SPEED SHAFT UP — FIGURE 2

1. After installing the drive per the Owners Manual installation instructions, determine which of the lower four side plug locations on the drive will provide the best location for the standpipe, observing clearance required to remove dipstick (Dimension D, Table 1). Discard the air vent. When the air vent location is not used for the standpipe, relocate the pipe plug from the selected standpipe location to the air vent location. Recoat pipe plug threads with Permatex #3 or equivalent sealant before reinstalling

Figure 2

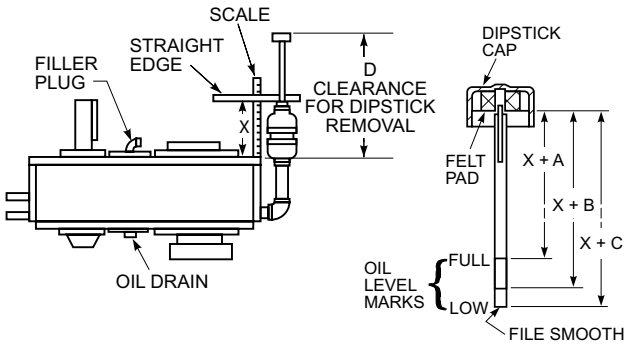

© Rexnord Corporation. All Rights Reserved.
Rexnord
3001 W. Canal St., Milwaukee, WI 53208-4200 USA
Telephone: 414-342-3131 Fax: 414-937-4359 www.rexnord.com

2. Coat all pipe threads of kitted parts with Permatex #3 or equivalent sealant.
3. Assemble kitted parts to drive as illustrated in Figure 2 and then secure the standpipe with an external support to maintain its vertical position.
4. Carefully measure Dimension X as illustrated in Figure 2.
5. From Table 1:

   X + A equals oil level “Full” mark.

   X + B equals oil level “Low” mark.

   X + C equals dipstick length.
6. Scribe Dimensions X + A and X + B on the dipstick as illustrated in Figure 1. Make measurements from the felt pad in the dipstick cap.
7. Lightly chisel permanent oil level marks on the scribed lines and cut the dipstick to the length marked. File end of dipstick smooth.
8. Install magnetic drain plug (furnished) in oil drain location.
9. Remove the oil filler plug. Add oil until the oil level reaches the “Full” mark on the dipstick. Coat the filler plug (not vented) with Permatex #3 or equivalent sealant and replace it.
10. Filler plug must always be removed to relieve entrapped air before checking oil level.

© Rexnord Corporation. All Rights Reserved.

Modifications For Non-Standard Mounting Positions

INSTRUCTIONS

For non-standard mountings, modify drives as illustrated below and on Page 38 to assure satisfactory lubrication. For applications that exceed the limits shown, drives that are both rotated AND tilted and for with backstops, consult Factory.

***CAUTION**: Inadequate lubrication will cause damage.*

When replacing a pipe plug (P) with a street elbow (E), insert the plug in the elbow (E/P). When replacing a pipe plug (P) with a street elbow (E), pipe nipple (N) and a pipe cap (C), discard the pipe plug. Kits consist of parts for an oil expansion chamber. Pipe fittings and kits are available from Rexnord. Pipe fittings may also be purchased locally. Use galvanized pipe fittings.

Remove all pipe plugs and coat them and the added parts, with Permatex #3 or equivalent to prevent leakage. Install parts as illustrated to suit the mounting position. The air vent must be in the top of the drive or in the kit standpipe. Fill drives with oil to the level indicated by the letter "L" in the following drawings.

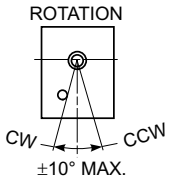

STANDARD DRIVE MOUNTING LIMITS

The 10° Max rotation illustrated at the left applies to standard 3, 6, 9 & 12 o'clock mountings. For higher limits, follow the instructions at the left and the drawings below. (6 o'clock illustrated)

CODE

B — Reducing Bushing
C — Cap
E — Street Elbow
K — Oil Expansion Chamber Kit
L — Oil Level
N — Nipple
P — Pipe Plug
STD — No Modifications

HORIZONTAL DRIVE MODIFICATIONS FOR 10 TO 20° DRIVE ROTATION

10 to 20° Clockwise Rotation

3 o'clock — CW Rotation

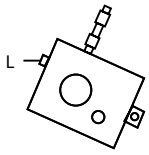

5407 = KIT 0786777
5415 THRU 5608 = KIT 0786778

6 o'clock — CW Rotation

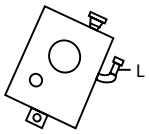

5407 = .750 E/C & .750 x 1.375 N
5415 & 5507 = 1.250 E/C & 1.250 x 1.625 N
5608 = 1.25 E/P

9 o'clock — CW Rotation

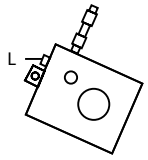

5407 = KIT 0786777
5415 THRU 5608 = KIT 0786778

12 o'clock — CW Rotation

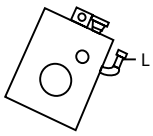

5407 = .750 E/C & .750 x 1.375 N
5415 & 5507 = 1.250 E/C & 1.250 x 1.625 N
5608 = 1.25 E/P

10 to 20° Counterclockwise

3 o'clock — CCW Rotation

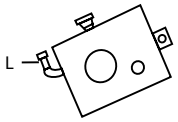

5407 = .750 E/C & .750 x 3.00 N
5415 = 1.250 E/C & 1.250 x 3.00 N
5507 = 1.250 E/C & 1.250 x 3.50 N
5608 = 1.250 E/C & 1.250 x 2.50 N

6 o'clock — CCW Rotation

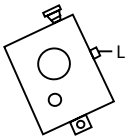

5407, 5415, 5507, & 5608 = STD

9 o'clock — CCW Rotation

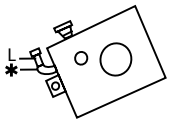

5407 = .750 E/C & .750 x 1.375 N
5415 & 5507 = 1.250 E/P
5608 = STD

* This oil level applies when only a street elbow with a pipe plug is used.

12 o'clock — CCW Rotation

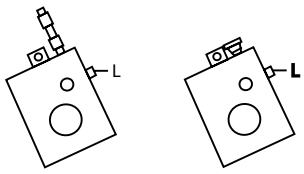

5608

5407, 5415 & 5507 = STD
5608 = KIT 0786778

© Rexnord Corporation. All Rights Reserved.
Rexnord
3001 W. Canal St., Milwaukee, WI 53208-4200 USA
Telephone: 414-342-3131 Fax: 414-937-4359 www.rexnord.com

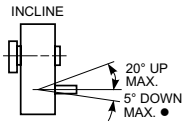

● 4407 & 4415 = 0° INCLING DOWN ON DRIVES WITH BACKSTOPS IN 9 OR 12 O'CLOCK MOUNTING POSITION

▲ 4507 & 4608 = 5° INCLINE ON DRIVES WITH BACKSTOPS IN ALL MOUNTING POSITIONS

STANDARD DRIVE MOUNTING LIMITS

The limits illustrated at the left applies to standard 3, 6, 9 & 12 o'clock mountings. For higher incline limits, follow the instructions on Page 38 and the drawings below. (6 o'clock illustrated)

CODE

C — Cap
E — Street Elbow
K — Oil Expansion Chamber Kit
L — Oil Level
N — Nipple
P — Pipe Plug
STD — No Modifications

Standard Pipe Fittings ▲ — Inches

.750-14 NPT	Falk No.	1.25-11.5 NPT	Falk No.
.750 Street Elbow	0915253	1.25 Street Elbow	0915255
.750 Cap	0914804	1.25 Cap	0914806
.750 x 1.375 Nipple	0915824	1.25 x 1.625 Nipple	0915882
.750 x 3 Nipple	0915836	1.25 x 2.5 Nipple	0915885
.750 x .500 Bushing	0914652	1.25 x 3 Nipple	0915886
		1.25 x 3.5 Nipple	0915897
		1.25 x .500 Bushing	0914656

▲ Kits: Falk Nos. 738471 . . . . Oil expansion chamber parts. All pipe fittings are galvanized.

HORIZONTAL DRIVE MODIFICATIONS FOR INCLINED H.S. SHAFT

H.S. Shaft Inclined 20 to 30° Up

3 o'clock — H.S.S. Up

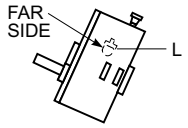

5407 = .750 E/P
5415 & 5507 = 1.25 E/P
5608 = STD

6 o'clock — H.S.S. Up

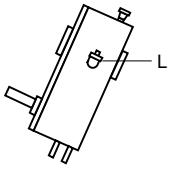

5407 = .750 E/P
5415 & 5507 = 1.25 E/P
5608 = STD

9 o'clock — H.S.S. Up

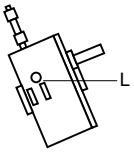

5407 = KIT 0786777
5415, 5507 & 5608 = KIT 0786778

12 o'clock — H.S.S. Up

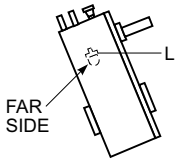

5407 = .750 E/P, KIT 0786777
5415 & 5507 = 1.25 E/P
5608 = STD

H.S. Shaft Inclined 5 to 30° Down

3 o'clock — H.S.S. Down

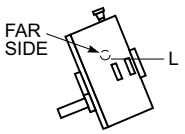

5407 THRU 5608 = STD

6 o'clock — H.S.S. Down

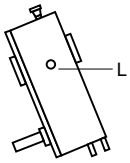

5407, 5415 & 5507 = STD
5608 = 5 - 20º STD
5608 = 21 - 30º 1.250 E/P

9 o'clock — H.S.S. Down

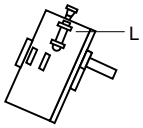

5407 = .750 E/C, .750 x 1.375 N, KIT 0786777
5415 & 5507 = 1.25 E/C & 1.25 x 2.50 N
5608 = 5 - 20º STD
5608 = 21 - 30º 1.250 E/P, KIT 0786778

12 o'clock — H.S.S. Down

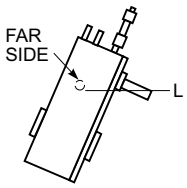

5407 = .750 E/P, KIT 0786777
5415 & 5507 = KIT 0786778
5608 = KIT 0786778

NOTE: FOR SIZES 5507 & 5608 WITH BACKSTOP, MAXIMUM INCLINE IS 5º (ALL CLOCK POSITIONS).

© Rexnord Corporation. All Rights Reserved.

Retaining Rings for Bushing Nuts And Thrust Plates

JR — Retaining Rings For Bushing Nuts

Drive Size	Manufacturer Part Number
5407	Truarc N5000-650
5415	Truarc N5000-725
5507	Truarc N5000-775
5608	Truarc N5000-900

JF & JSC — Retaining Rings For Thrust Plate Kits

Drive Size	Manufacturer Part Number
5407	Truarc N5000-500
5415	Eaton IN550
5507	Truarc N5000-600
5608	Truarc N500-725

Seal Housing Lip Seal for Type JSC

JSC — Seal Housing Lip Seal

Drive Size	Falk Part No.	Manufacturer Part Number
		Chicago Rawhide
5407	2913658	39320

Tooth Combinations for Vibrations Analysis

Type J05 — Tooth Combinations

Drive Size	Exact Ratio	Pinion Ref. #3A3	Gear Ref. #4A5
5407	4.938	16	79
5415	5.077	13	66
5507	4.929	14	69
5608	5.000	13	65

Type J14 — Tooth Combinations

Drive Size	Exact Ratio	Input		Output	
		Pinion Ref. #1A3	Gear Ref. #1A4	Pinion Ref. #2A3	Gear Ref. #4A4
5407	13.89	16	45	16	79
5415	13.61	25	67	13	66
5507	13.46	26	71	14	69
5608	13.82	17	47	13	65

Type J25 — Tooth Combinations

Drive Size	Exact Ratio	Input		Output	
		Pinion Ref. #1A3	Gear Ref. #1A4	Pinion Ref. #2A3	Gear Ref. #4A4
5407	25.04	14	71	16	79
5415	26.11	14	72	13	66
5507	24.29	14	69	14	69
5608	25.33	15	76	13	65

© Rexnord Corporation. All Rights Reserved.
Rexnord
3001 W. Canal St., Milwaukee, WI 53208-4200 USA
Telephone: 414-342-3131 Fax: 414-937-4359 www.rexnord.com

Drive Shaft Recommendations for Tapered Drive Shafts

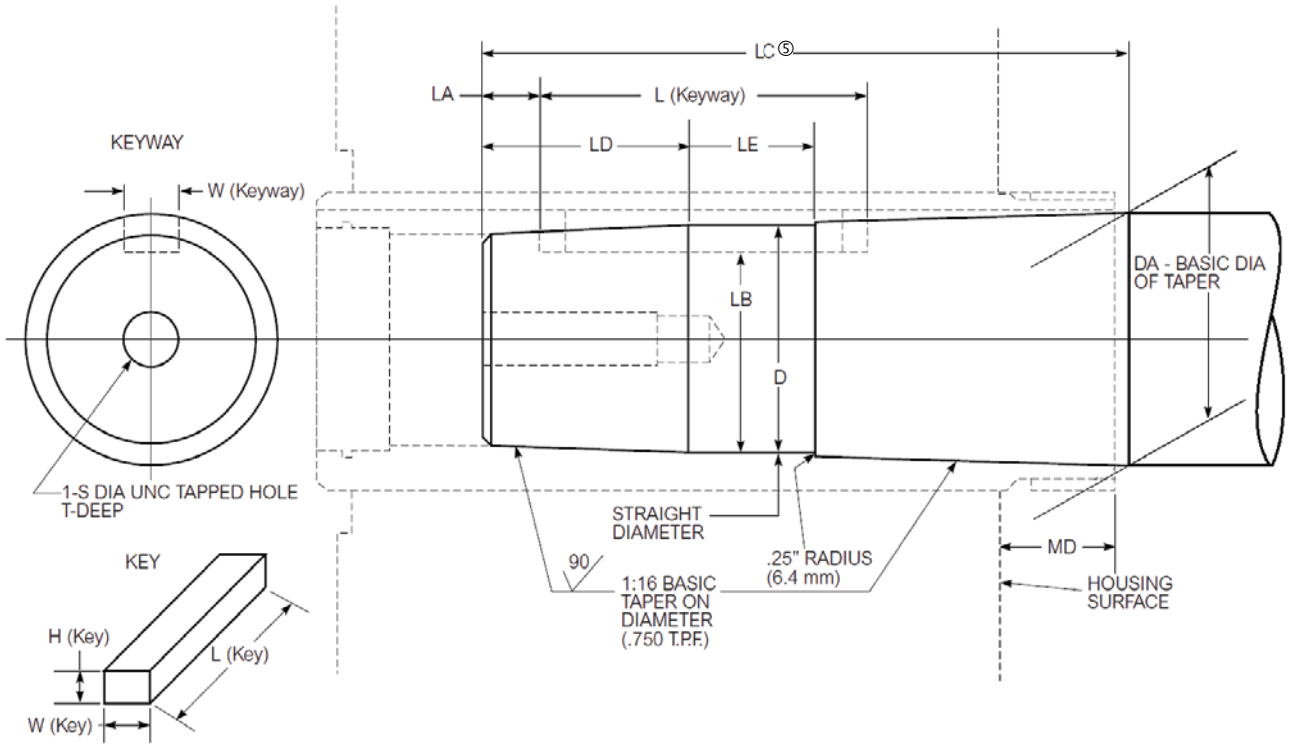

Dimensions — Inches (mm) ▲

Drive Size	Keyway W ■	Keyway L ±.010 (±0.25)	D ♦ +.000, –.005 (+0.00 –0.13)	DA	LA ±.030 (±0.76)	LB +.000, –.010 (+0.000 –0.250)	LC ✱ +.040, –.000 (+1.02 –0.00)	LD	LE	MD ●	S	T Min	Key W	Key H	Key L
5407	1.000 (25.40)	7.000 (177.80)	4.925 (125.10)	5.175 (131.45)	0.500 (12.70)	4.374 (111.10)	8.922 (226.62)	4.922 (125.02)	2.25 (57.2)	2.45 (62.2)	1.000-8	2.75 (69.8)	1.000	0.750	6.00
5415	1.250 (31.75)	8.750 (222.25)	5.455 (138.56)	5.767 (146.48)	1.000 (25.40)	4.864 (123.54)	10.925 (277.50)	6.00 (152.4)	2.50 (63.5)	2.85 (72.4)	1.250-7	2.50 (63.5)	1.250	0.875	7.50
5507	1.250 (31.75)	9.000 (228.60)	6.003 (152.48)	6.327 (160.71)	1.000 (25.40)	5.368 (136.35)	12.020 (305.31)	7.00 (177.8)	2.50 (63.5)	3.10 (78.7)	1.250-7	2.50 (63.5)	1.250	0.875	7.75
5608	1.500 (38.10)	11.500 (292.10)	7.277 (184.84)	7.617 (193.47)	1.000 (25.40)	6.061 (153.95)	13.875 (352.42)	8.50 (215.9)	3.00 (76.2)	3.21 (81.5)	1.250-7	3.00 (76.2)	1.500	1.500	10.00

▲ Dimensions are for reference only and are subject to change without notice unless certified.
■ Inch keyway width tolerances are as follows: over .500" (12.70) to & including 1.000" (25.40) = +.0030" (+0.076), –.0000" (–0.000), over 1.000" (25.40) to & including 1.500" (38.10) = +.0035" (+0.089), –.0000 (–0.000). Inch keyway depth tolerance is +.010" (+0.25), –.000" (–0.00).
♦ Straight diameter is used to aid in measurement and manufacture of the keyway.
● Dimension "MD" will vary slightly depending on degree of axial compression during installation and manufacturing tolerances.
✱ Dimension "LC" is a measure of the length of the taper from the basic taper diameter ("DA") to the end of the shaft. NOTE: for Drive Size 5107, "LC" will be located approximately 1.16" (29.5 mm) inside end of hollow shaft (not near the end of the hollow shaft as shown).

© Rexnord Corporation. All Rights Reserved.

Drive Shaft Recommendations Using TA Taper Bushing

INTRODUCTION — These instructions are for use when a flange mounted 5407-5608JF drive is to be used and the manufacture of a tapered drive shaft is not feasible. For JF tapered drive shaft recommendations, see Appendix H. Use this appendix to retrofit existing applications or for outfitting new installations. Parts required are the drive, TA Taper bushing and a thrust plate kit.

This appendix will allow the use of a straight drive shaft with the tapered bushing (without spanner nut) on flange mounted applications. Provided are dimensions (Table 4) for shaft recommendations and instructions for the installation and removal of the assembly. All bushing bore sizes, which are available in the standard Quadrive, are possible with this setup.

FIGURE 2 — 5407-5608JF drives are furnished with a flange adapter installed. The hollow shaft of the drive has a tapered bore which accepts the tapered bushing. When the bushing is drawn into the taper, a clamping force is applied to the drive shaft. The drive shaft is drawn into the hollow shaft via a fastener in the thrust plate. The bushing seats against a shoulder on the driven shaft and is drawn into the drive with the shaft. Removal is accomplished by using a jackscrew in the thrust plate and forcing the drive shaft out of the drive. The retaining ring in the drive shaft assures that the bushing will be removed along with the shaft.

DRIVE SHAFT RECOMMENDATIONS — The recommendations for the drive shaft consist of two major features. The first is the shoulder which must be provided in the location shown in Figure 2. This shoulder provides the backing necessary to draw the bushing into the taper. A permanently fixed shoulder must be provided in order for this design to be effective. The shoulder may be a welded collar or an integral step. SET COLLARS ARE NOT ACCEPTABLE. A retaining ring may be used, in the driven shaft, to provide the shoulder, but stress concentrations occur at the groove and therefore shaft stresses must be checked. The second major feature on the shaft is the retaining ring groove in the shaft end. This feature is recommended to ensure positive removal of the bushing when the drive shaft is removed from the drive. The threaded hole in the end of the drive shaft accepts the thrust plate fastener.

***WARNING**: Lock out power source and remove all external loads from system before servicing drive or accessories.*

INSTALLATION PROCEDURE — With the drive shaft manufactured per the recommendations shown, and the bushing selected for the proper shaft diameter, remove and discard the retaining ring and spanner nut from the bushing assembly.

5407JF — Use of the tapered bushing requires that the flange of the bushing be removed to clear the adapter, Figure 2. A flangeless bushing is available for the 3.4375" (87 mm) diameter shaft only.

ALL JF DRIVES — Slide the bushing (flange end first) onto the drive shaft until it contacts the shoulder on the shaft. Insert the key through the bushing and into the drive shaft keyway. Install the retaining ring into the groove in the drive shaft. Bring the drive into position, line up the hollow shaft keyway with the key and slide the bushing and drive shaft into the hollow shaft bore.

Attach the drive to the mounting surface with fasteners (not provided). Refer to Table 1 for fastener size and tightening torque. Assemble the thrust plate and retaining ring into the counterbore in the hollow shaft. Insert the thrust plate fastener through the thrust plate and thread into the drive shaft end. Tighten to the torque given in Table 2. Install all covers and guards.

REMOVAL PROCEDURE — Remove hollow shaft cover. Remove the thrust plate fastener, retaining ring and thrust plate from the hollow shaft. Refer to Table 3 and select a backing bolt and flat washer and install them into the drive shaft as illustrated in Figure 1. The head of the backing bolt provides a working surface for the removal bolt. Reinsert the thrust plate and retaining ring into the hollow shaft and select a removal bolt from Table 3. Thread the removal bolt into the thrust plate until it contacts the backing bolt head. Tighten the removal bolt to the torque indicated in Table 3 (If the thrust plate rotates in the shaft, align the slot in the plate with the hollow shaft keyway and insert a screw driver or piece of key stock to prevent rotation of the plate). After torquing the bolt, as instructed, strike the bolt sharply with a hammer and retorque the bolt if separation of the drive from the shaft did not occur. Repeat this procedure, retorquing the bolt after each blow, until separation occurs.

Figure 1

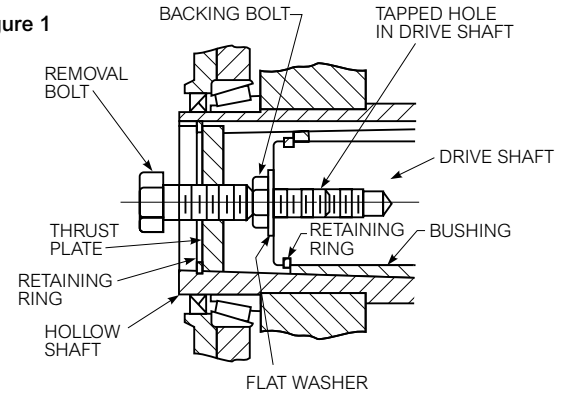

Table 1 — JF Drive – Foundation Fastener & Tightening Torque

(Non-Lubricated Fasteners)

Drive Size	Fastener Size & Grade	Max. Tightening Torque lb-ft (Nm)
5407	.750-10UNC, Grade 5	245 (332)
5415	1.250-7UNC, Grade 5	1050 (1424)
5507	1.250-7UNC, Grade 5	1050 (1424)
5608	1.500-6UNC, Grade 5	1842 (2497)

Table 2 — Thrust Plate Fastener Data

(Non-Lubricated Fasteners)

Drive Size	Fastener Size & Grade	Max Tightening Torque lb-ft (Nm)	Min Thread Depth Inches (mm)
5407	1.000-8UNC x 5.50, Grade 8	792 (1073)	2.75 (69.8)
5415	1.250-7UNC x 6.00, Grade 8	1596 (2164)	3.00 (76.2)
5507	1.250-7UNC x 6.00, Grade 8	1596 (2164)	3.00 (76.2)
5608	1.250-7UNC x 8.00, Grade 8	1596 (2164)	3.50 (88.9)

© Rexnord Corporation. All Rights Reserved.
Rexnord
3001 W. Canal St., Milwaukee, WI 53208-4200 USA
Telephone: 414-342-3131 Fax: 414-937-4359 www.rexnord.com

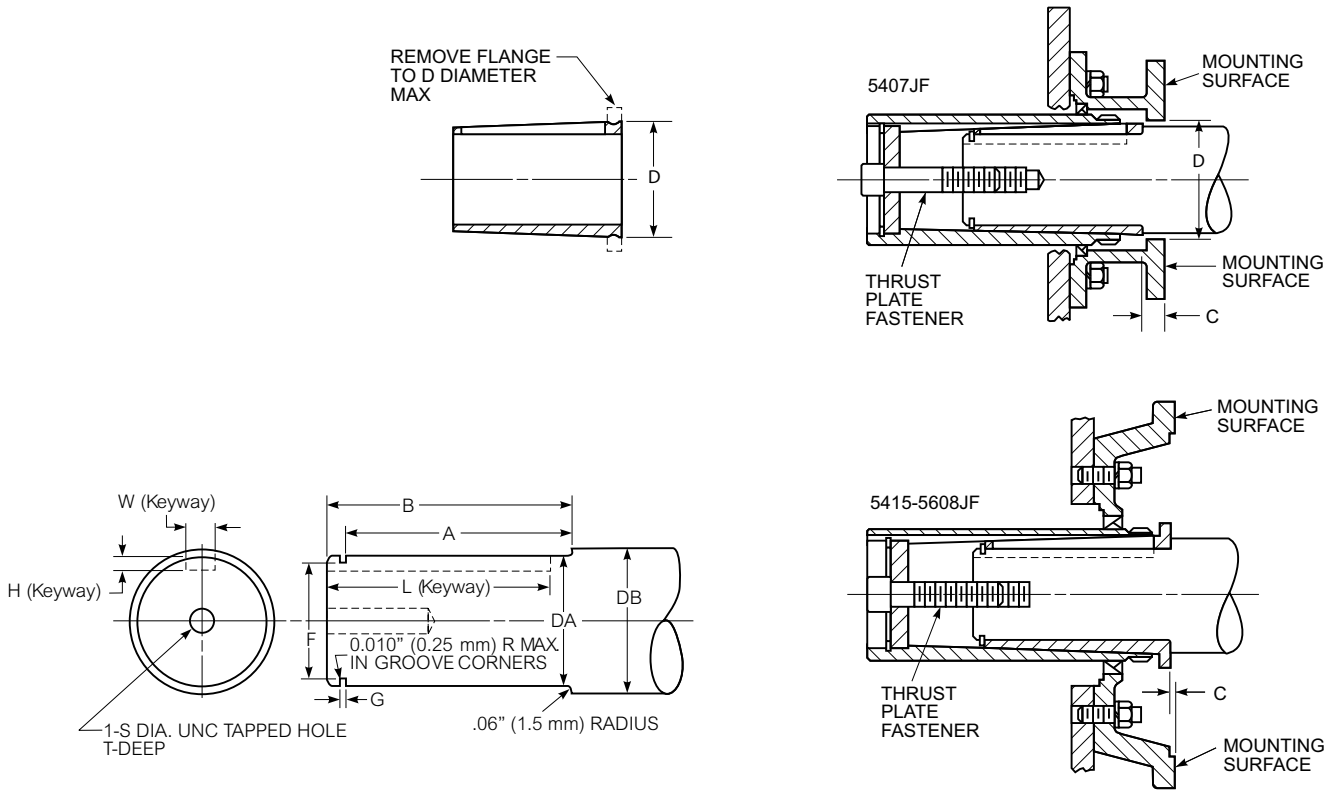

Table 3 — Removal & Backing Bolt Size and Tightening Torque

Drive Size	Removal Bolt Size & Min Length – Inches	Max Tightening Torque lb-ft (Nm)	Backing Bolt Size & Max Length – Inches
5407	1.125-7UNC x 3.00	742 (1006)	1.000-8UNC x 2.50
5415	1.500-6UNC x 3.75	1842 (2497)	1.250-7UNC x 2.75
5507	1.500-6UNC x 3.75	1842 (2497)	1.250-7UNC x 2.75

Table 4 — Dimensions For Largest Bore Bushing – Inches (mm) ▲

Drive Size	Thrust Plate Kit ■	Thrust Plate Part No.	A ±0.010 (±0.25)	B ±0.030 (±0.75)	C ♦	D ●	DA ✱	DB Min	Retaining Ring ♣				Keyway ♥			S	T Min
									Groove		Spir O Lox		W	H	L Min		
									F	G	Mfg No.	Max O.D.					
5407	TP5407JF	0778780	8.160 (207.26)	8.500 (215.90)	1.384 (35.15) 1.037 (26.34)	5.250 (133.35)	4.4375	4.750 (120.65)	4.059 4.071	0.120 0.125	RSN-425	4.688	1.000	0.5000	7.750 (196.85)	1.000-8	2.75 (69.8)
5415	TP5415JF	0778781	10.100 (256.54)	10.375 (263.52)	0.867 (22.02) 0.520 (13.21)	. . .	4.9375	5.250 (133.35)	4.616 4.604	0.079 0.084	RS-475	5.125	1.250	0.6250	9.563 (242.90)	1.250-7	3.00 (76.2)
5507	TP5507JF	0778782	10.440 (265.18)	10.750 (273.05)	0.617 (15.67) 0.269 (6.83)	. . .	5.4375	5.750 (146.05)	5.114 5.100	0.079 0.084	RS-525	5.688	1.250	0.6250	9.875 (250.82)	1.250-7	3.00 (76.2)
5608	TP5608JF	0778783	12.530 (318.26)	13.000 (330.20)	2.639 (67.03) 2.292 (58.22)	. . .	6.5000	7.000 (177.80)	5.993 5.977	0.174 0.182	RSN-625	6.813	1.500	0.7500	12.625 (320.68)	1.250-7	3.50 (88.9)

▲ For metric drive shafts or bushing bores smaller than the maximum, provide the retaining ring groove per manufacturers' recommendations, keyway appropriate for the shaft diameter, and DB minimum of 0.300" (7.62 mm) larger than the bushing bore to provide adequate backing.
■ Kit consists of: thrust plate, thrust plate fastener, hollow shaft retaining ring and drive shaft retaining ring.
♦ The range for C dimensions is the variation which may occur due to axial compression and manufacturing tolerances.
● The D dimension is the recommended minimum bore which clears the TA Taper bushing flange.
✱ Shaft diameter tolerances are per AGMA as follows: over 2.50" to & including 4.00" = +.000", -.006"; over 4.00" to & including 6.00" = +.000", - .007"; over 6.00" to & including 7.00" = +.000", -.008". Metric drive shafts are to be based on h10 tolerances.
♣ Smalley retaining rings may be used instead of Spir O Lox by substituting WS for RS, WST for RST or WSM for RSN.
♥ Inch keyway width tolerances are as follows: .500" to & including 1.000" = +.0030", -.0000"; over 1.000" to & including 1.500" = +.0035", -.0000". Metric keyway widths are based on class N9 tolerances. Inch keyway depth tolerance is +.010", -.000". Refer to ISO 773 or DIN 6885 sheet 1 for metric keyway depth tolerances.

© Rexnord Corporation. All Rights Reserved.

Drive Shaft Recommendations Using (TCB) Kit

INTRODUCTION — These instructions are for use when a screw conveyor 5407JSC drive is to be used and the following conditions exist: Falk standard or 316 stainless steel JSC tapered drive shafts can not be used due to special extension dimensions or materials; or manufacturing a special tapered drive shaft is not feasible. Use this appendix to retrofit existing applications or for outfitting new installations where the above conditions warrant. For tapered shaft recommendations, see Appendix H.

This appendix will allow the use of a straight (non tapered) drive shaft with a special bushing conversion kit on screw conveyor applications. The bushing conversion kit may also be used on flange mounted 5407JF applications where the Falk JSC seal housing is to be used as the mounting flange. This kit provides one bushing bore per drive size as shown in Table 4. Provided in this appendix are dimensions for drive shaft recommendations and instructions for the installation and removal of the assembly.

FIGURE 2 — The hollow shaft of the drive has a tapered bore which accepts the tapered bushing. When the bushing is drawn into the taper, a clamping force is applied to the drive shaft. The drive shaft is drawn into the hollow shaft via a fastener in the thrust plate. The bushing seats against a shoulder on the drive shaft and is drawn into the drive with the shaft. Removal is accomplished by using a jackscrew in the thrust plate and forcing the drive shaft out of the drive. The retaining ring in the drive shaft assures that the bushing will be removed along with the shaft.

DRIVE SHAFT RECOMMENDATIONS — The recommendations for the drive shaft consist of two major features. The first is the shoulder which must be provided in the location shown in Figure 2. This shoulder provides the backing necessary to draw the bushing into the taper. A permanently fixed shoulder must be provided in order for this design to be effective. The shoulder may be a welded collar or an integral step. SET COLLARS ARE NOT ACCEPTABLE. A retaining ring may be used in the drive shaft, to provide the shoulder, but stress concentrations can occur at the groove and therefore shaft stresses must be checked. The second major feature on the shaft is the retaining ring groove in the shaft end. This feature is recommended to ensure positive removal of the bushing when the drive shaft is removed from the drive. The threaded hole in the end of the drive shaft accepts the thrust plate fastener.

***WARNING**: Lock out power source and remove all external loads from system before servicing drive or accessories.*

INSTALLATION PROCEDURE — With the shaft manufactured per the recommendations shown, proceed as follows:

The seal housing may be assembled to the drive before or after the drive shaft is installed into the drive, but if the seal housing is installed to the drive first, the lip type seal (if used) must be installed from the extension end.

Slide the bushing (large end first) onto the drive shaft until it contacts the shoulder on the shaft. Insert the key through the bushing and into the drive shaft keyway. Install the retaining ring into the groove in the drive shaft. Line up the keyway in the drive hollow shaft with the key in the drive shaft and slide shaft/bushing assembly into the hollow shaft. Attach the seal housing to the drive with the fasteners provided. Tighten fasteners to torque given in Table 1. Assemble the thrust plate and retaining ring into the counterbore in the hollow shaft. Insert the thrust plate fastener through the thrust plate and thread into the drive shaft end. Tighten to the torque given in Table 2. Install all covers and guards.

REMOVAL PROCEDURE — Remove low-speed shaft input end cover. Remove the thrust plate fastener, retaining ring and thrust plate from the hollow shaft. Refer to Table 3 and select a backing bolt and flat washer and install them into the drive shaft as illustrated in Figure 1. The head of the backing bolt provides a working surface for the removal bolt. Reinsert the thrust plate and retaining ring into the hollow shaft and select a removal bolt from Table 3. Thread the removal bolt into the thrust plate until it contacts the backing bolt head. Tighten the removal bolt to the torque indicated in Table 3 (If the thrust plate rotates in the shaft, align the slot in the plate with the hollow shaft keyway and insert a screwdriver or piece of key stock to prevent rotation of the plate). After torquing the bolt, as instructed, strike the bolt sharply with a hammer and retorque the bolt if separation of the drive from the shaft did not occur. Repeat this procedure, retorquing the bolt after each blow, until separation occurs.

Figure 1

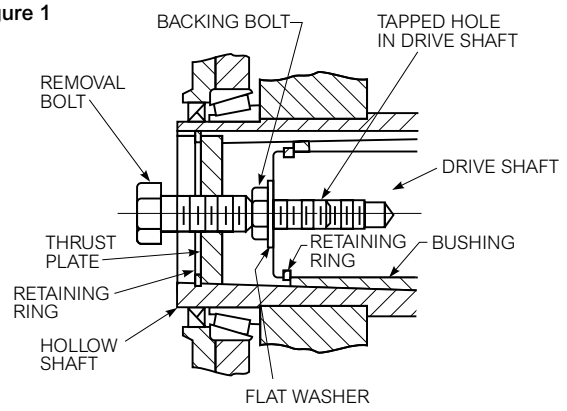

Table 1 — Seal Housing Fastener Tightening Torque (Non-Lubricated Fasteners)

Drive Size	Fastener Size & Grade	Max Tightening Torque lb-ft (Nm)
5407	.750-10UNC	330 (447)

Table 2 — Thrust Plate Fastener Data

(Non-Lubricated Fasteners)

Drive size	Fastener Size & Grade	Max Tightening Torque lb-ft (Nm)	Min Thread Depth Inches (mm)
5407	1.000-8UNC x 5.50, GR.8	792 (1074)	2.75 (69.8)

© Rexnord Corporation. All Rights Reserved.
Rexnord
3001 W. Canal St., Milwaukee, WI 53208-4200 USA
Telephone: 414-342-3131 Fax: 414-937-4359 www.rexnord.com

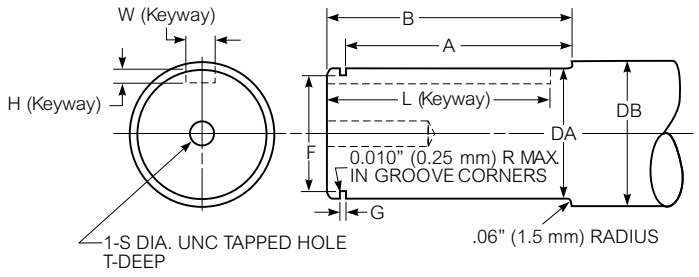

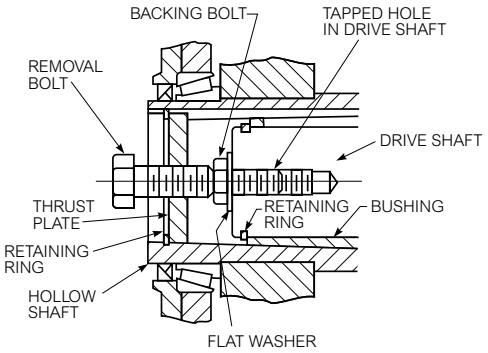

Table 3 — Removal & Backing Bolt Size and Tightening Torque

Drive Size	Removal Bolt Size & Min Length – Inches	Max Tightening Torque lb-ft (Nm)	Backing Bolt Size & Max Length – Inches
5407	1.125-7UNC x 3.00	742 (1006)	1.000-8UNC x 2.50

Table 4 — Dimensions – Inches (mm)

Taper Conversion Bushing Kit ▲	(TCB) Kit Part No.	A ±0.010 (±0.25)	B ±0.030 (±0.75)	C ■	DA ♦	DB ● +0.000, -0.003 (+0.00, -0.08)	Retaining Ring ✱				Keyway ♣			S	T Min	Weld/Integral Flange	
							Groove		Spir O Lox		W	H	L Min			U	V
							F	G	Mfg No.	Max O.D.							
TCB5407J-3.438	0786823	7.655 (194.44)	9.500 (241.30)	1.879 (47.73) 1.552 (39.42)	3.4375	3.938 (100.03)	3.263 3.251	0.103 0.108	Spir O Lox RSN-343	. . .	0.875	0.4375	9.250 (234.95)	1.000-8	2.75 (69.8)	1.500 (38.10)	. . .

▲ Kit consists of: Bushing, thrust plate, fastener, key, retaining ring, and hardware.
■ The range for C dimensions is the variation which may occur due to axial compression and manufacturing tolerances.
♦ Shaft diameter tolerances are per AGMA as follows: over 2.50" to & including 4.00" = +.000", - .006".
● If a lip type seal is used, a 32 rms finish is recommended.
✱ Smalley retaining rings may be used instead of Spir O Lox by substituting WSM for RSN.
♣ Inch keyway width tolerances are as follows: over .500" to & including 1.000" = +.0030", -.0000"; 1.000". Inch keyway depth tolerance is +.010", -.000".

© Rexnord Corporation. All Rights Reserved.

OSHA V-Belt Guard Installation for Drives Without Shaft Fan

***WARNING**: Consult applicable local and national safety codes for proper guarding of rotating members.*

***WARNING**: Lock out power source and remove all external loads from drive before servicing drive or accessories*

1. ASSEMBLE MOTOR MOUNT AND MOTOR TO DRIVE AS INSTRUCTED IN APPENDIX D

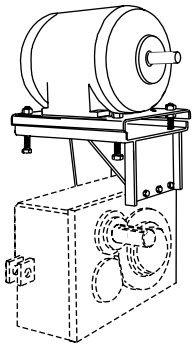

2. ASSEMBLE BELT GUARD BRACKETS TO MOTOR MOUNT

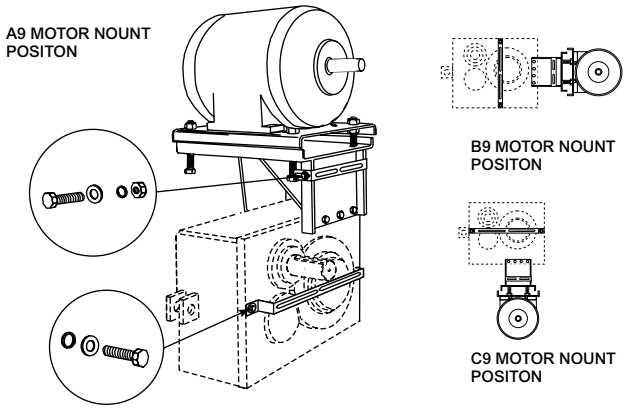

3. ASSEMBLE BACKPLATE TO BRACKETS

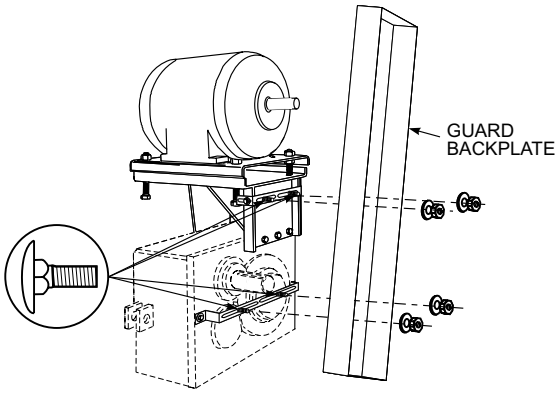

4. ASSEMBLE THREADED RODS TO BACKPLATE & MOUNT SLOT COVER(S) AS REQUIRED

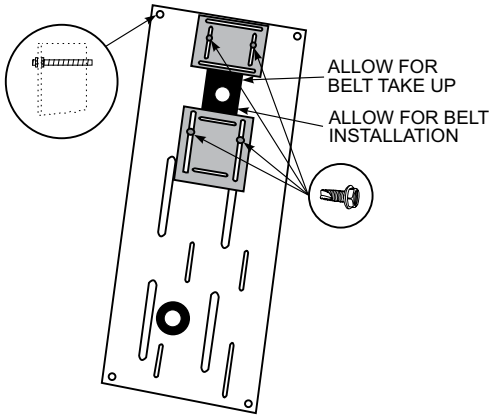

5. MOUNT BELT DRIVE AS INSTRUCTED IN APPENDIX D

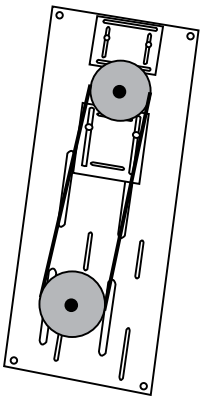

6. MOUNT COVER AND APPLY WARNING LABEL

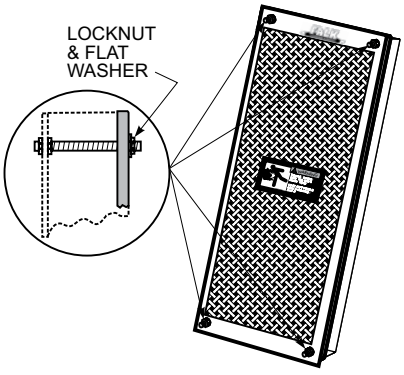

© Rexnord Corporation. All Rights Reserved.
Rexnord
3001 W. Canal St., Milwaukee, WI 53208-4200 USA
Telephone: 414-342-3131 Fax: 414-937-4359 www.rexnord.com

OSHA V-Belt Guard Installation for Drives With Shaft Fan

***WARNING**: Consult applicable local and national safety codes for proper guarding of rotating members.*

***WARNING**: Lock out power source and remove all external loads from drive before servicing drive or accessories*

1. ASSEMBLE MOTOR MOUNT AND MOTOR TO DRIVE AS INSTRUCTED IN APPENDIX D

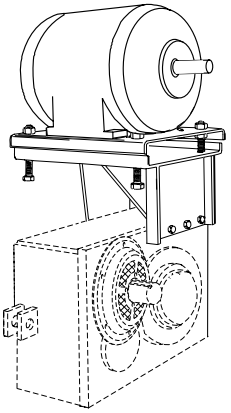

2. ASSEMBLE GUARD MOUNTING BRACKET & ADAPTER TO GUARD BACKPLATE

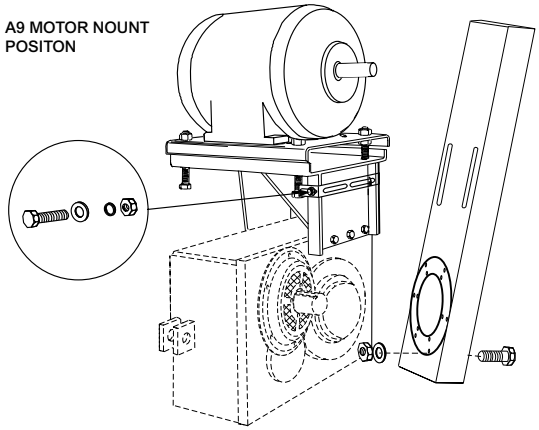

3. ASSEMBLE BACKPLATE WITH ADAPTER TO SHROUD

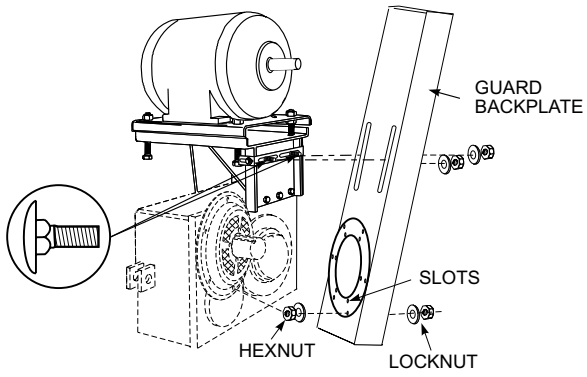

4. ASSEMBLE THREADED RODS TO BACKPLATE & MOUNT SLOT COVER(S) AS REQUIRED

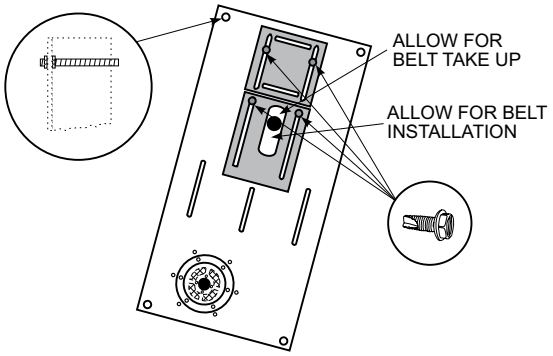

5. MOUNT BELT DRIVE AS INSTRUCTED IN APPENDIX D

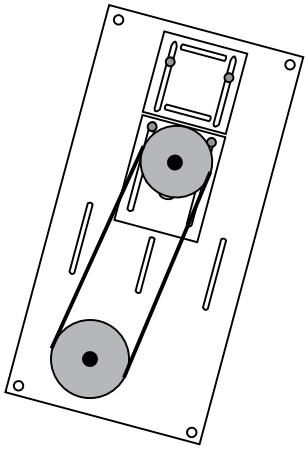

6. MOUNT COVER

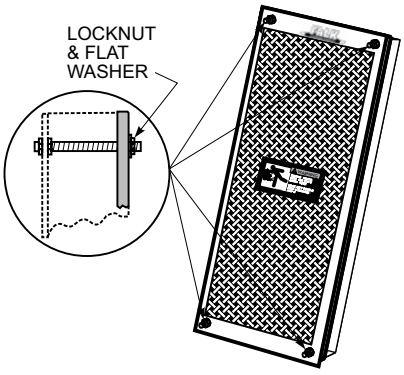

Rexnord
3001 W. Canal St., Milwaukee, WI 53208-4200 USA
Telephone: 414-342-3131 Fax: 414-937-4359 www.rexnord.com

(PN-212395) **378-206**
February 2020 (Supersedes 01/2019)
© Rexnord Corporation. All Rights Reserved.

Electric Fan Installation

INTRODUCTION

The following instructions apply to the installation of the electric fan. The sump temperature switch is provided as a standard feature.

The sump temperature switch features dual settings for two independent single-pole, double-throw circuits. Only one circuit is used to control the fan. The remaining circuit may be used to control a warning light, an alarm, or a motor shutdown switch if the temperature setting is exceeded. The sump temperature switch wiring diagram is given in Figure 1.

Figure 1

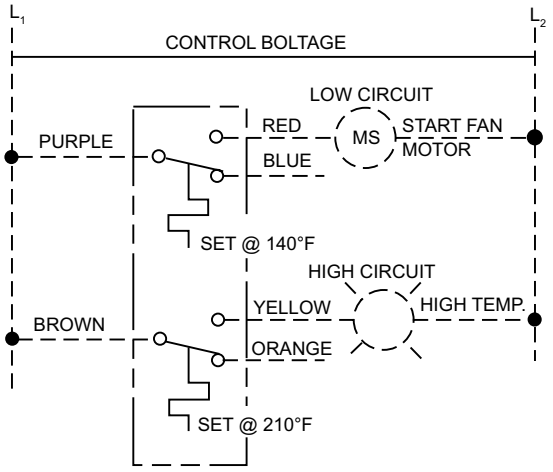

Refer to Figure 2 for electric fan, temperature switch and bulb well standard mounting locations. The bulb well houses the sump temperature probe. These mounting locations are based on drive mounting position.

Figure 2

ELECTRIC FAN, TEMP. SWITCH & BULF-WELL STANDARD LOCATIONS (BASED ON DRIVE MOUNTIN POSITION)

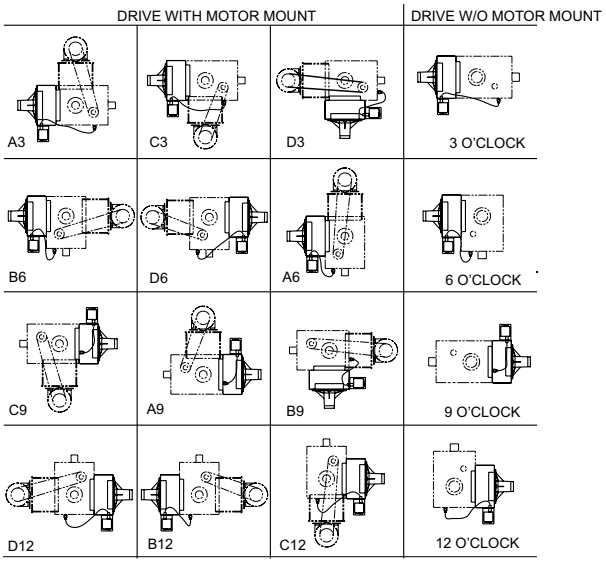

ASSEMBLY INSTRUCTIONS

***WARNING**: Consult applicable local and national safety codes for proper guarding of rotating members. Lock out power source and remove all external loads from drive before servicing drive or accessories.*

1. Drain oil from the drive.
2. ELECTRIC FAN PANEL REWORK — The holes in the electric fan panel must be enlarged to accommodate the fasteners used to mount the electric fan to the shroud. Align the fan panel to the shroud. Locate and drill four 0.4375" (12 mm) diameter clearance holes in line with the pre-drilled holes in the shroud.
3. Insert four 1.25" (32 mm) cap screws through the fan mounting holes in the shroud with the threaded portion of the cap screw away from the drive. Secure the cap screws to the shroud with flat washer (2 washers for 5407) and nut. See Figure 3.

Figure 3

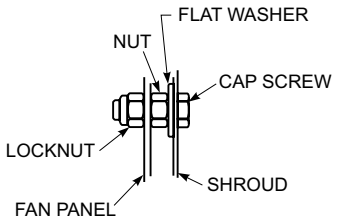

4. Secure the sump temperature switch to the switch mounting bracket. Attach the switch and mounting bracket to the fan shroud. Refer to Figure 2 for location.
5. Install the temperature probe bulb well in the designated drain hole as shown in Figure 4. Refer to Figure 2 for bulb well location.

***CAUTION**: Sump temperature probe must be located below oil level.*

Figure 4

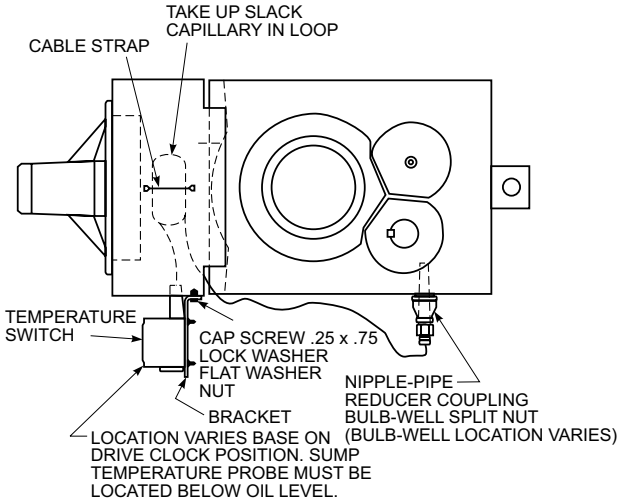

© Rexnord Corporation. All Rights Reserved.
Rexnord
3001 W. Canal St., Milwaukee, WI 53208-4200 USA
Telephone: 414-342-3131 Fax: 414-937-4359 www.rexnord.com

6. Mount the shroud on drive using spacers and hardware. See Figure 5.

Figure 5

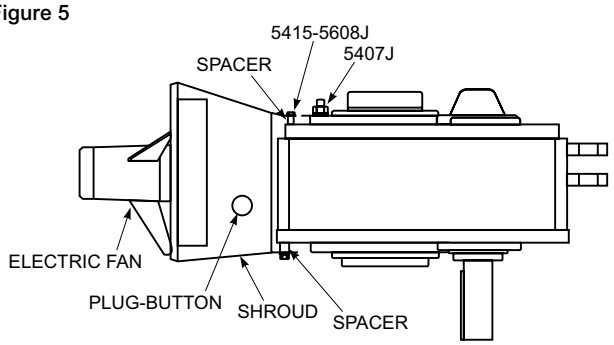

7. Place the temperature probe in bulb well and secure capillary to the shroud by using one or two cable straps to remove extra slack. Refer to Figure 4.

   ***CAUTION**: Do not crimp capillary.*
8. Install split nut in the bulb well to retain the temperature probe.
9. Sump temperature switch settings:
   a) Remove the two screws and cover from the top of switch to reveal the sump temperature switch setting wheels. Set the low circuit to turn the electric fan on at 140°F (60°C). Set the high circuit at 210°F (99°C) to engage alarm or main motor cutout.
   b) Remove the four screws and cover from the front of the sump temperature switch to reveal the differential setting wheels. Rotate the wheels to the full clockwise position as viewed from the top of the switch. This is the maximum temperature differential setting of 15°F (9°C). Replace the cover and four screws.
10. Fill drive to oil level specified in Section I with oil specified in Appendix A.
11. Position the electric fan panel on the remaining threaded portion of the cap screws from Step 2 and secure it to the shroud with four locknuts. See Figure 3.
12. Remove the condensation plug from the bottom of the electric fan.
13. Place the button plug in the shroud. See Figure 5.
14. Connect the electric fan to the power source per local and national electrical codes.

© Rexnord Corporation. All Rights Reserved.

Reliability Package

INTRODUCTION

The Quadrive Reliability Package shown in Figure 1 includes an enhanced desiccant and particulate filter, anti-foam block, oil level sight glass and oil sampling port. The Reliability Package will be supplied in two subassemblies, a prebent hydraulic tube and an AirMax Plus breather that will need to be assembled by the customer.

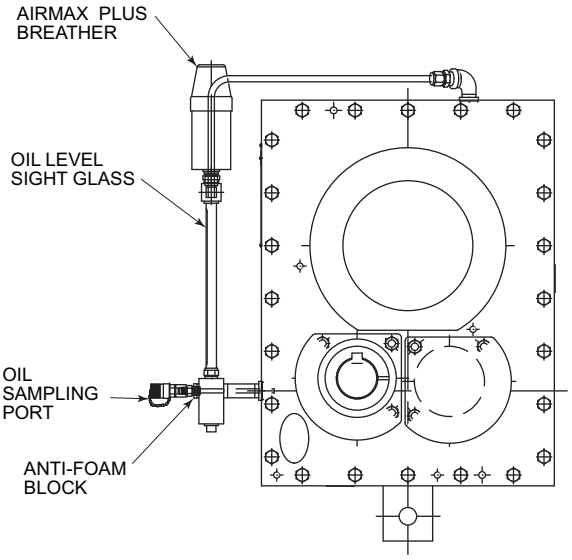

Figure 1 — Reliability Package

The Quadrive reliability kit part numbers and corresponding drive sizes are provided in Table 1.

TABLE 1 — Kit Part Numbers for Quadrive Reliability Package

Drive Size	Kit Part Number
5407J	7708106
5415J	7708107
5507J	7708109
5608J	7708108

INSTALLATION INSTRUCTIONS

When removing components from the shipping package, use caution to avoid damaging the oil sight glass.

The sight glass and elbow subassemblies have been pressure tested in the factory. It will be the installer's responsibility to ensure that the installed fittings are oil tight. The Reliability Package can be assembled by following the steps outlined below:

1. **Pipe Plugs** — Remove the two (2) 1.25" NPT pipe plugs from locations #1 & #2 of the gearbox as shown in Figure 2.

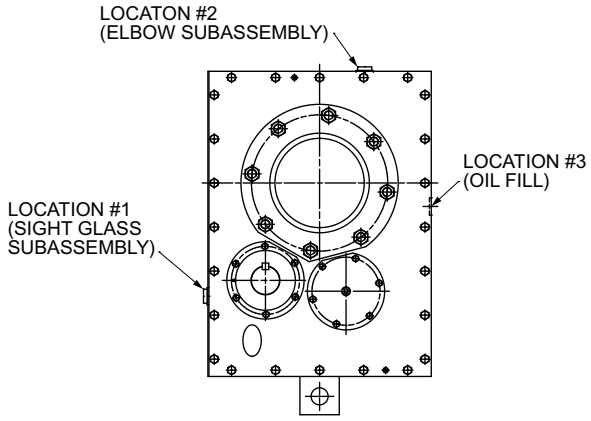

Figure 2 — Pipe Plug Locations

2. **Sight Glass Subassembly** — Prepare the sight glass subassembly for installation by applying Loctite joint compound #1534294 to the male threads as shown in figure 3. Install the sight glass subassembly into the Quadrive housing at location #1 as shown in Figure 2. The galvanized pipe nipple shown in Figure 3 should be used to thread the subassembly hand tight. Using a pipe wrench, turn the pipe nipple an additional 2-3 turns so that it is oil tight. The sight glass should be in a vertical position when completed as shown in Figure 1.

   ***CAUTION**: Do not use the sight glass to thread the assembly into the housing.*

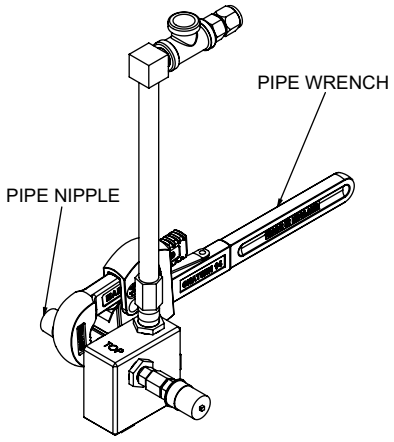

Figure 3 — Sight Glass Subassembly

© Rexnord Corporation. All Rights Reserved.
Rexnord
3001 W. Canal St., Milwaukee, WI 53208-4200 USA
Telephone: 414-342-3131 Fax: 414-937-4359 www.rexnord.com

3. **Elbow Subassembly** — Prepare the elbow subassembly for installation by applying Loctite joint compound #1534294 to the male threads as shown in figure 4. Install the elbow subassembly into the Quadrive housing at location #2 as shown in Figure 2. The galvanized elbow should be used to thread the subassembly hand tight. Using a pipe wrench, turn the galvanized elbow an additional 2-3 turns so that it is oil tight. The elbow should be parallel to the output shaft when finished as shown in Figure 1.

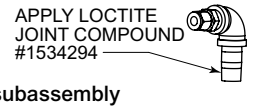

Figure 4 — Elbow subassembly

4. **AirMax Plus** — Prepare the AirMax breather for installation by removing the two smaller red plastic plugs from the bottom air vents located 180°F apart. Also, remove the large red plastic plug from the breather mounting threads. Thread the breather into the pipe tee of the Reliability Package as shown in Figure 1. Hand-tighten only to seal o-ring against pipe tee. For detailed breather installation and maintenance instructions, refer to the literature included with the AirMax Plus breather (GR3-002).
5. **Lifting** — The drive can be lifted by using either the torque arm anchor brackets or a sling wrapped around the seal housing and input shaft. Lift and mount the drive by following the drive installation and lifting instructions provide in Section 1 (page 6) of this Owner's Manual. If the torque arm bracket is used to lift the unit, confirm that there isn't any oil in the drive before lifting

   ***CAUTION**: To prevent damage to the hydraulic tubing, it should NOT be installed until after the drive has been lifted and mounted into position. Prevent debris from entering the drive by covering the Lenz fittings of the subassemblies, until the hydraulic tubing can be installed.*
6. **Hydraulic Tubing** — Install the hydraulic tubing by following the steps outlined below:
   1. Remove the nut and tapered split ring from the two Lenz fittings.
   2. Slide the nut and the tapered split ring onto the ends of the hydraulic tubing. The large end of the tapered ring should face the fitting.
   3. Apply oil to the O-ring.
   4. Insert the ends of the hydraulic tubing simultaneously into the appropriate Lenz fittings.Continue to push the tubing into the Lenz fittings until the tube ends are past each o-ring for proper sealing.

      NOTE: The hydraulic tubing may have to be bent slightly to install it properly into the Lenz fittings thus ensuring the tubing extends past the o-rings in the fittings.
   5. Once the hydraulic tube is positioned properly, slide the tapered spit rings up to the Lenz fittings.
   6. Tighten the nut hand tight. Then with a wrench tighten one turn or until the rear of the tapered ring is flush with the nut.
7. **Oil Fill** — Remove the oil fill pipe plug from location #3 as shown in Figure 2. Using a funnel with a flexible spout, fill the gearbox with an approved lubricant (refer to Page 22 for Lubrication Recommendations; DO NOT USE GMAX 6000 or other types of polyalkylene glycol (PAG) lubricants which are not compatible with the polycarbonate sight glass). Once the oil level reaches the bottom of the fill hole, wait a minimum of 5 minutes for the oil to reach the oil level sight glass. Add additional oil to the gearbox and repeat the process until the oil level in the gearbox and sight glass are constant and the excess runs out. It is recommended to mark the sight glass with this final oil level.

   The oil level sight glass is intended to be used when the gearbox is not running; in the static condition. Therefore, the sight glass contains a label that indicates a static oil level. *(oil levels tend to fluctuate based on oil churning and are dependent on speed and direction of rotation; for continuous direction, and continuous speed applications it is recommended that the oil level sight glass be marked once steady state operating conditions have been reached)*.

   Prepare the oil fill pipe plug for installation by applying Loctite joint compound #1534294 to the threads. Reinstall the elbow subassembly into the Quadrive housing at location #3 as shown in Figure 2.

MAINTENANCE INSTRUCTIONS

AirMax Breather — Falk AirMax Plus breathers have visual indication when they need to be changed. As the breather functions, the silica gel material changes color from blue to pink as it absorbs moisture. When all the material has turned pink in color, it is time to replace the breather. Breather life is dependent on operating conditions and ambient conditions (humidity). Breather should be changed every twelve (12) months regardless of color

Oil Sampling — The oil sampling port that is included allows users to easily draw oil samples for lubrication analysis. Refer to the Oil Analysis Report section in Appendix A of this document for detailed recommendations on oil content. The oil sample port has a screw on cover that needs to be unscrewed in order to access the valve to the sampling port. The valve can then be actuated by screwing on the threaded oil sample port adapter included in our Oil Sample Kit (sold separately; see Table 2). The sampling bottle is composed of PET (polyethylene terephthalate) which is compatible with most industrial lubricants; however, user should confirm compatibility prior to use. It should be noted that the cleanliness of the bottle can greatly affect the results of an oil sample analysis; therefore user is cautioned to use care to avoid contamination of the sample.

The oil sample should be taken shortly after the unit has been shut down to ensure the oil is properly mixed. It is important to initially purge some oil from the oil sampling port and discard this purge, prior to collecting the sample. Be sure to check the oil level in the drive after the sample has been collected (additional oil may need to be added to ensure proper level).

TABLE 2 — Sample Port Adapter, Sampling Kit and Breather for use by Maintenance Professionals

Part Description	Part Number
Oil Sampling Kit (includes oil sample port adapter, case of 12 sample bottles, vacuum pump, 20' of tubing and labels)	10097025
AirMax Plus HG-1 Breather	10097978

© Rexnord Corporation. All Rights Reserved.