nexen

PRECISION MOTION CONTROL

Application & Selection Guide

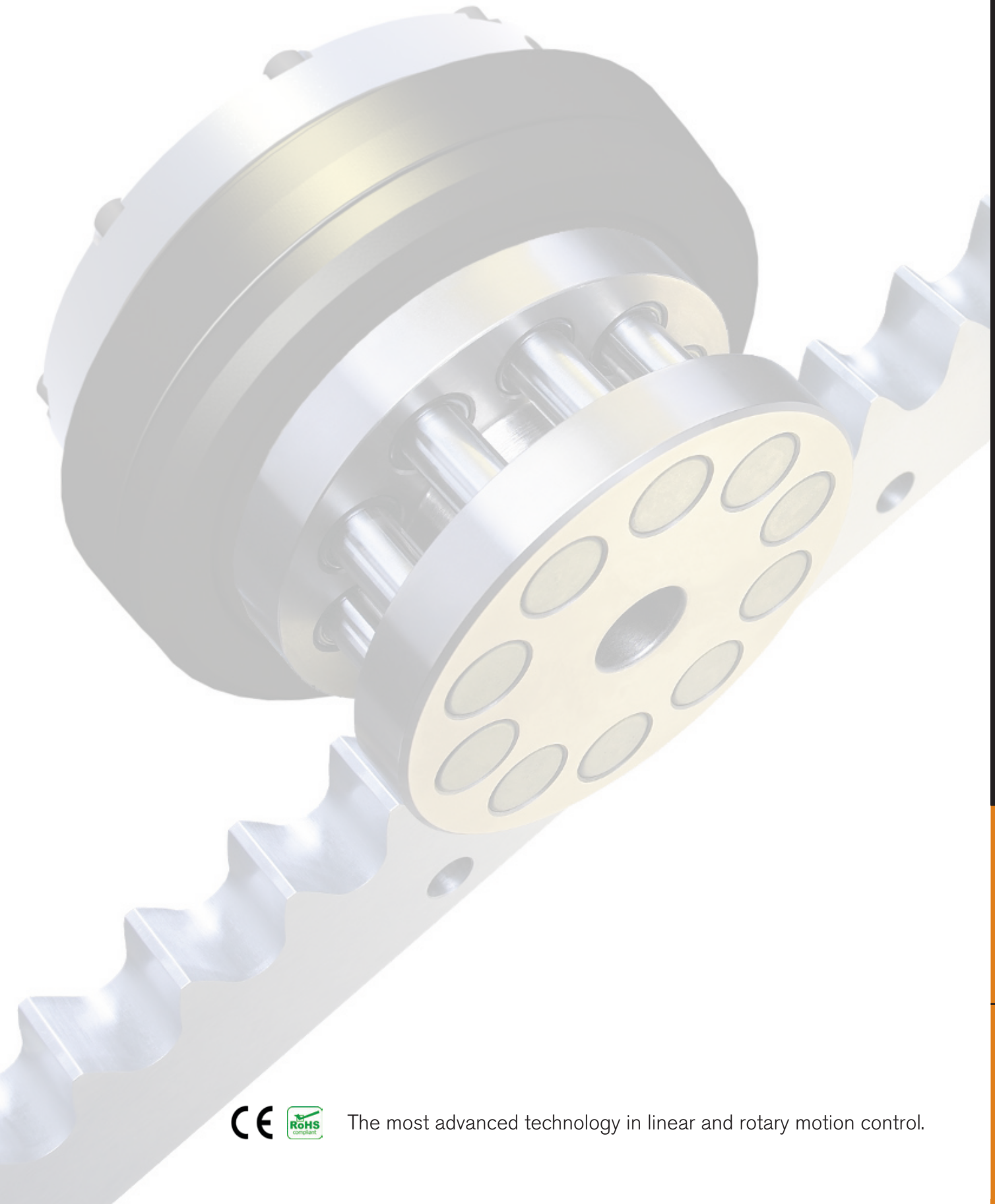

The most advanced technology in linear and rotary motion control.

ROLLER PINION TECHNOLOGY

RPS System 5

Racks 9

Gears 15

Pinions & Accessories 21

RPS System Life 31

Harmonic Gearhead 39

APPENDIX Definitions & Notes 51

A New Standard For Precision

The Nexen Roller Pinion System (RPS) revolutionizes linear and rotary motion control possibilities. Giving a fresh face to traditional rack and pinion systems, the RPS overcomes the troublesome limitations of conventional drive systems and offers unmatched performance. Across industries as varied as laser cutting and mining, users will benefit from the accuracy and 99% efficiency of this new technology.

The incredible performance of the RPS starts with a pinion consisting of bearing-supported rollers that engage a unique tooth profile. Two or more rollers engage the teeth in opposition at all times to eliminate backlash. The pinion rollers glide easily along a tangent path and roll smoothly down the tooth face for quiet, low-friction operation.

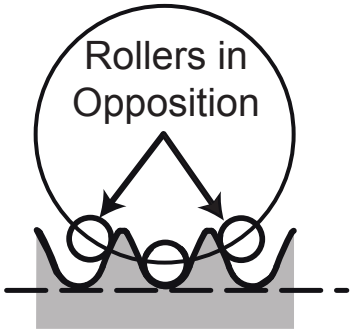

Constant Positional Accuracy Regardless of the Distance Traveled

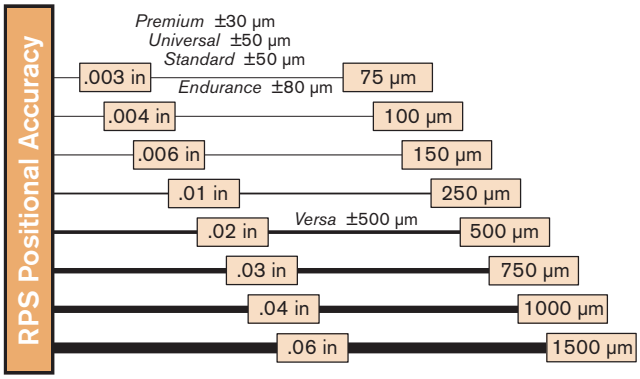

Every aspect of the RPS system is designed for reliable, easy operation. With customizations available to meet the specific needs of any application and multiple material finishes, the RPS system can go anywhere. Even installation is worry-free with a simple alignment tool to ensure positional accuracy over multiple sections of rack.

Dependable Performance. Every Time.
The Nexen RPS System Always Delivers.



Indexer

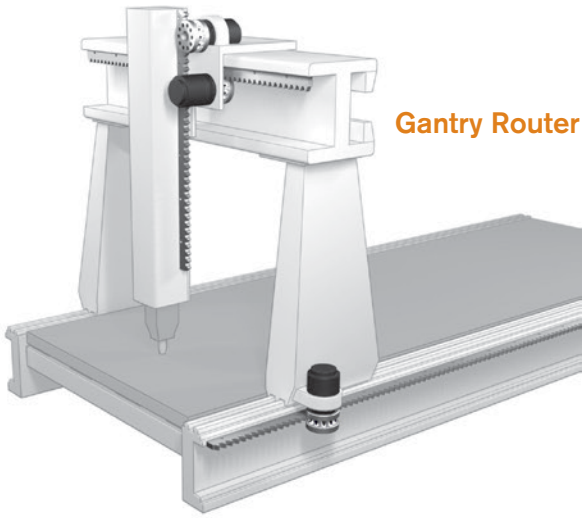

Gantry Router

Machine Tools • Plasma & Laser Cutting • Woodworking • Food Processing • Multi-head On A Common Axis • Gantries

THE NEXEN ADVANTAGE

Overcoming Common Problems Found in Traditional Drive Systems

INDUSTRY PROBLEMS	Ball Screws	Traditional Rack/Gear & Pinion Systems	Belt Drives	Chain Drives	Linear Motors Direct Rotary Stages Direct Drive Motors	nexen ROLLER PINION SYSTEMS
Low Accuracy			✓	✓		High Positional Accuracy
Backlash / Vibrations	✓	✓	✓	✓		Near-Zero Backlash
High Cost	✓	✓			✓	Economical, Efficient Components
Dirty Operation	✓	✓	✓	✓		No Dust Emissions
High Maintenance	✓	✓		✓	✓	Little to No Maintenance
Low Load Capacity			✓		✓	High Load Capacity
Noisy	✓	✓	✓	✓		Quiet: pinion rollers glide smoothly along teeth
Low Speed	✓	✓				High Speeds (up to 11 m/sec)
Magnetic Field					✓	No magnetic field
High Wear/ Low Life	✓	✓	✓	✓		Long Life (up to 36 million meters)
Limited System Length/Size	✓		✓	✓		Custom Rack Sizes & Modular Components

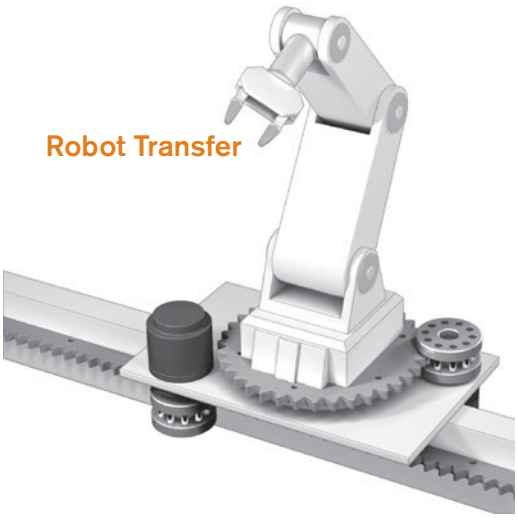

Robot Transfer



Rotopod

EVEN In The Most Challenging **APPLICATIONS**

Medical Imaging • Measurement Systems • Clean Rooms • Material Handling • Vacuum Environments • Welding

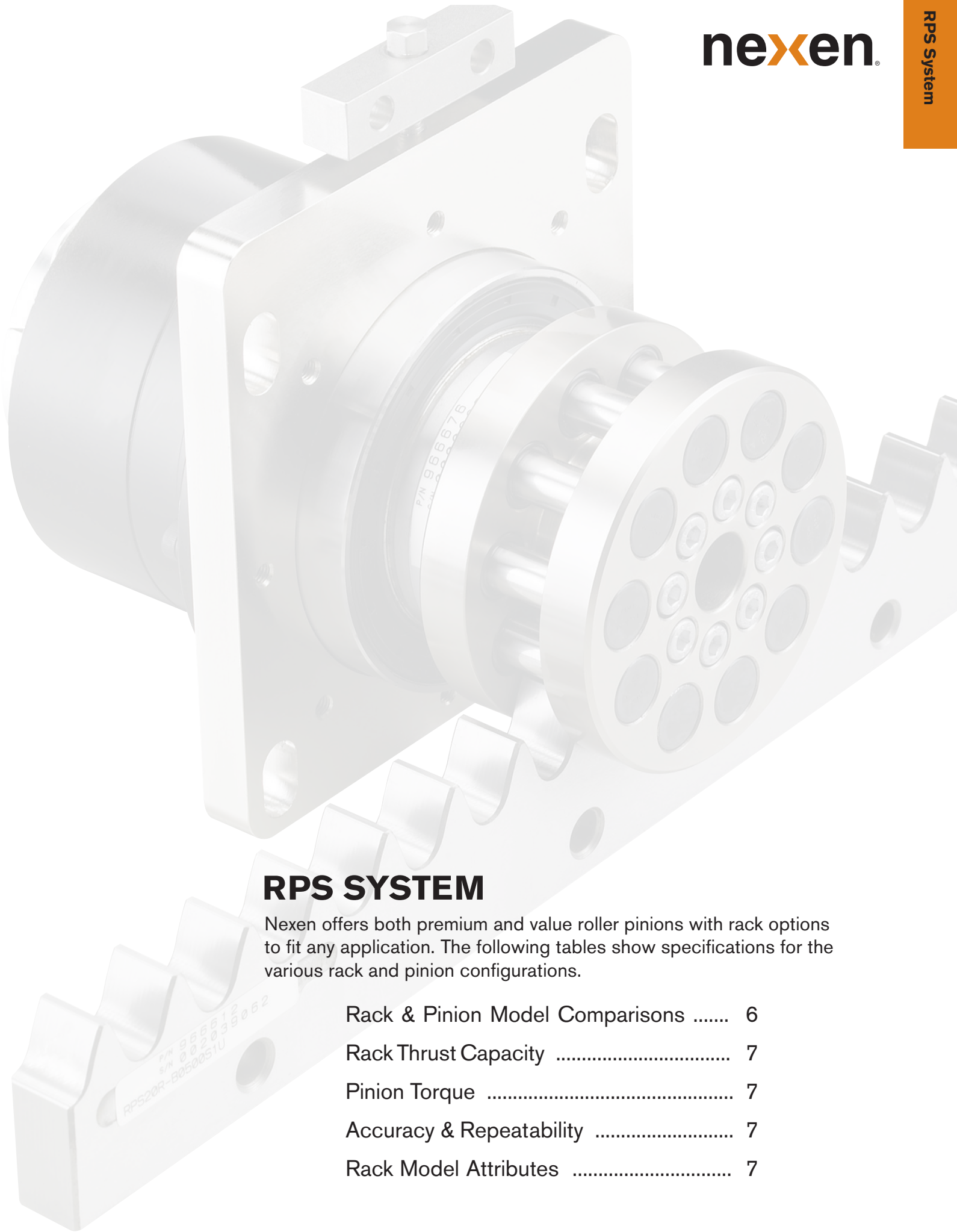

RPS SYSTEM

Nexen offers both premium and value roller pinions with rack options to fit any application. The following tables show specifications for the various rack and pinion configurations.

Rack & Pinion Model Comparisons 6

Rack Thrust Capacity 7

Pinion Torque 7

Accuracy & Repeatability 7

Rack Model Attributes 7

RPS System Configurations & Comparisons

Nexen features six different rack models and two pinion types, ensuring the perfect solution for any application. First compare the rack attributes to determine which rack model best meets your needs. Then compare the specifications of both the premium and value pinions to select the ideal RPS system configuration.

Rack Models Available

PREMIUM RACK

As the name ***premium*** suggests, this is Nexen's top of the line model featuring market leading accuracy and a hard chrome coating for corrosion resistance. A perfect choice for any precision motion need.

- Very High Precision/Accuracy
- Suitable for Dirty Environments
- Lubrication Free
- High Load Capacity
- High Corrosion Resistance

Precision Assembly Equipment • Machine Tool/CNC Mills • High Precision Gantry • Robotics

STANDARD RACK

The Standard Rack offers similar performance to the Premium model without the corrosion resistant coating. With slightly lower accuracy, the standard model still delivers dependable performance in many the same types of applications. A great, cost-saving choice when corrosion resistance is not required.

- High Precision/Accuracy
- High Load Capacity
- No Corrosion Resistance
- Lower Cost than Premium Rack

Precision Assembly Equipment • Machine Tool/CNC Mills • High Precision Gantry • Robotics

ENDURANCE RACK

This is the work horse of the product line, combining both high load capacity and good corrosion resistance.

- High Load Capacity
- Medium Corrosion Resistance
- Good Accuracy (not high precision)

General Assembly Equipment • Machine Tool • Gantry Systems

UNIVERSAL RACK

With better accuracy than Endurance Racks, the Universal Rack is a great option for lower load applications when corrosion resistance is not required.

- High Accuracy
- Medium Load Capacity
- No Corrosion Resistance

Material Handling Equipment • Gantry Systems • Packaging Equipment • General Motion Control

UNIVERSAL STAINLESS RACK

Get all the features of the Universal Rack with the added benefits of corrosion resistant stainless steel.

- High Accuracy
- Medium Load Capacity
- Wet or Dirty Environments
- Very High Corrosion Resistance

Material Handling Equipment • Gantry Systems • Packaging Equipment • General Motion Control

VERSA RACK

Made from thermoplastic, this rack can go places no other racks can go. It's wide range of applications make it a great fit for general motion control applications looking for the advantages of the RPS in a conventional accuracy version.

- Extremely High Corrosion Resistance
- Light Load Motion Control
- High Durability
- Basic Actuator (similar to cylinder/belt)

Equipment with Conventional Accuracy Requirements • Packaging • General Motion Control

Pinion Models Available

PREMIUM PINION

This long time standard at Nexen offers the best precision on the market. Use with any RPS rack for unbeatable performance.

- Very High Precision/Accuracy
- High Torque Capacity
- Great Performance in Any Application

VALUE PINION

A great fit for unique applications, Nexen offers the Value pinion to fit applications looking for the general features of Nexen's RPS in a conventional accuracy version.

- Lighter Load, General Accuracy Applications
- Harsh Environments
- Available in Sizes 16, 20 & 25

RPS System Specifications

Table 1 Rack Thrust Capacity (N)

RPS Size		Premium Rack			Standard Rack			Endurance Rack			Universal & Universal Stainless Racks			Versa Rack		
		Accel.	Avg.	Static	Accel.	Avg.	Static	Accel.	Avg.	Static	Accel.	Avg.	Static	Accel.	Avg.	Static
PREMIUM PINION	10	250	250	380	NA	NA	NA	NA	NA	NA	NA	NA	NA	NA	NA	NA
	12	500	500	750	NA	NA	NA	NA	NA	NA	NA	NA	NA	NA	NA	NA
	16	2400	1000	2400	2400	1000	2400	1500	1000	2000	750	750	750	500	500	500
	20	2900	1500	3000	2900	1500	3000	2250	1500	3000	1125	1125	1125	750	750	750
	25	4000	2200	4400	4000	2200	4400	3300	2200	4400	1650	1650	1650	1100	1100	1100
	32	6300	3600	7200	6300	3600	7200	5400	3600	7200	2700	2700	2700	NA	NA	NA
	40	6000	6000	12000	6000	6000	12000	6000	6000	12000	4500	4500	4500	NA	NA	NA
	4014	14000	14000	21000	14000	14000	21000	14000	14000	21000	10500	10500	10500	NA	NA	NA
VALUE PINION	16	500														
	20	750														
	25	1100														

Table 2 Pinion Torque (Nm)

RPS Size	Premium Pinion			Value Pinion		
	Peak Torque	Max. Average Torque for Full Life	Static Torque	Peak Torque	Max. Average Torque for Full Life	Static Torque
10	4.0	4.0	6.0	NA	NA	NA
12	9.5	9.5	14.3	NA	NA	NA
16	61.1	33.7	61.1	12.8	12.8	12.8
20	92.3	52.5	95.5	23.9	23.9	23.9
25	159.2	89.5	176	43.8	43.8	43.8
32	385.0	218.7	440	NA	NA	NA
40	458.4	458.4	916.8	NA	NA	NA
4014	1247.8	1247.8	1871.6	NA	NA	NA

Table 3 Accuracy & Repeatability

PINION TYPE \ RACK MODEL		Premium Rack	Standard Rack	Endurance Rack	Universal Rack & Universal Stainless	Versa Rack
Premium Pinion	Accuracy ± µm	30	50	80	50	500
	Repeatability ± µm	5	10	20	10	20
Value Pinion	Accuracy * ± µm	110	130	160	130	580
	Repeatability * ± µm	5	10	20	10	20

Table 4 Rack Model Attributes (NOT AFFECTED BY PINION CHOICE)

ATTRIBUTES \ RACK MODEL		Premium Rack	Standard Rack	Endurance Rack	Universal Rack	Universal Stainless	Versa Rack
Backlash*	µm	0					
Corrosion Resistant Surface Treatment		Hard Chrome	None	Nitrided	None	None	Plastic
Corrosion Resistance Rating		High	None	Medium	None	Very High	Extremely High
Lubrication Free Operation		Yes up to 30 m/min	No	Yes up to 30 m/min	No	No	Yes up to max speed
Noise Level	dB	up to 75 (Speed Dependent)					
Temperature Range	°C	-5 to 40					

* Specifications listed for the Value Pinion are "out-of-box" ratings. Over time, these specifications are affected by operating torque and speed.

NOTE: Refer to the ***System Life*** section for Load Life Comparison. See the ***Definitions*** section at the end of this catalog for details on these attributes.

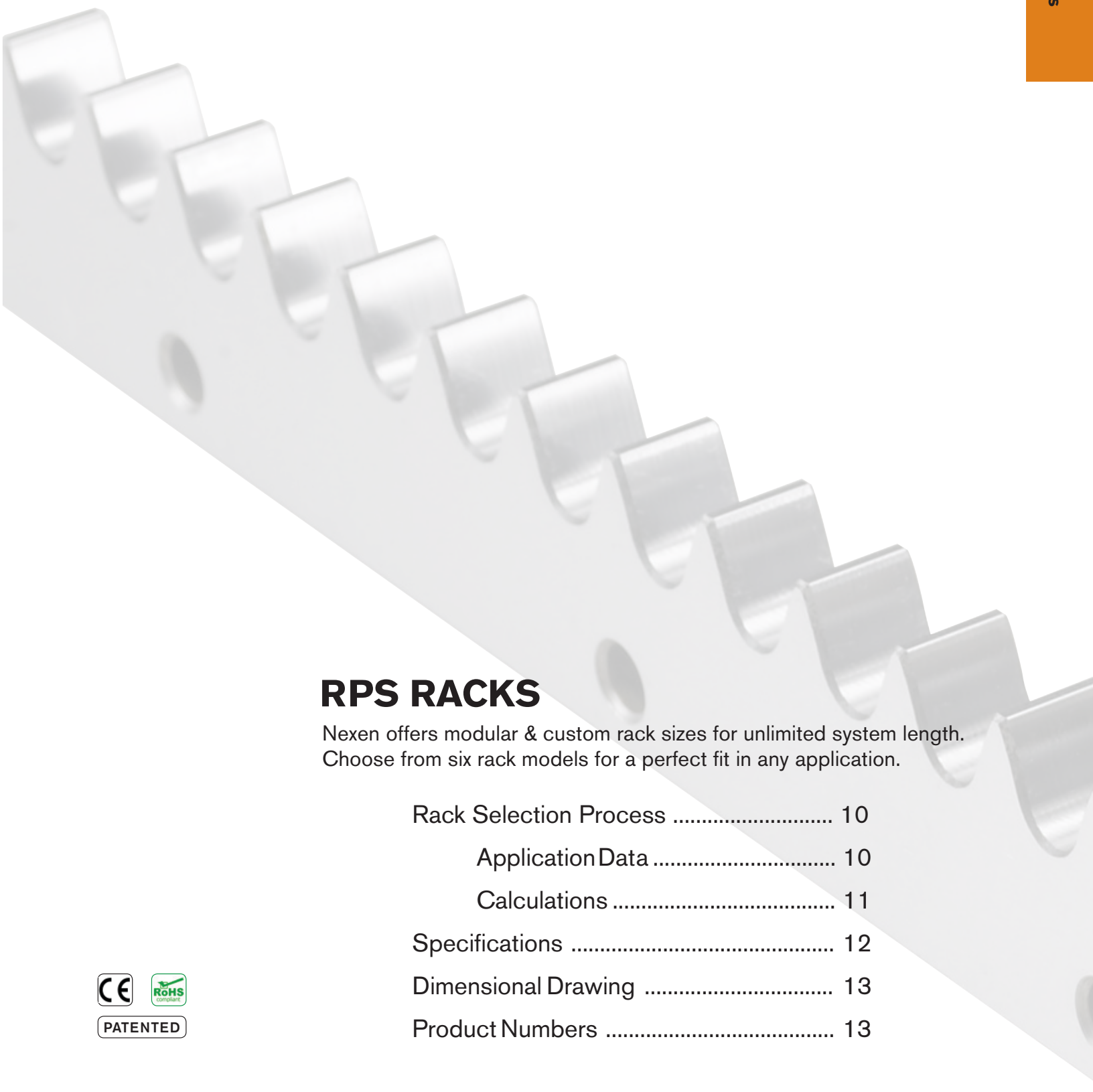

RPS RACKS

Nexen offers modular & custom rack sizes for unlimited system length.
Choose from six rack models for a perfect fit in any application.

Rack Selection Process 10

Application Data 10

Calculations 11

Specifications 12

Dimensional Drawing 13

Product Numbers 13

PATENTED

Linear Rack Selection Process

Nexen offers a large range of rack sizes and materials, so you can find the perfect components for your application. Take advantage of the following guide designed to make selecting the right components for your system simple. If you don't find what you need, contact Nexen Group.

Figure 1
Refer to this drawing when recording values for Force, Weight & Angle From Horizontal.

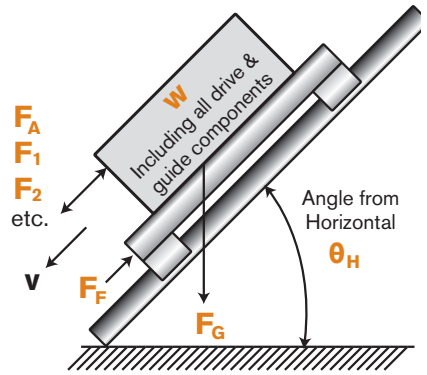

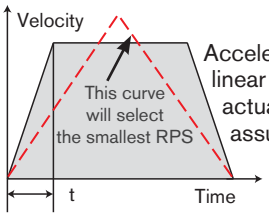

Acceleration based on time is linear and may not reflect the actual curve. All calculations assume constant acceleration.

Weight to be Driven should include all drive and guide components and structures being moved and should reflect the maximum weight each individual pinion must bear at any given time. Take into account any movable or asymmetric loads that may shift between multiple pinions during operation.

STEP 1: GATHER APPLICATION DATA

Before you begin calculations, there are nine key measurements that you will need from your application. Collect the data and record it in the chart below. With this data available you can proceed on to the calculations on the following page.

Measurements Required for RPS Selection	Customer Data (record your values below)	*Sample Data*
Angle from Horizontal (θ_H) Refer to Figure 1.	°	*60°*
Maximum Velocity (V_{max})	m/s	*0.5 m/s*
Travel Distance (**L**) (single direction move)	m	*5.4 m*
Cycles Per Day (N_{day}) (assumes single direction move)		*1000*
Acceleration Time (t_A) or Known Acceleration	seconds m/s^2	*0.5 s*
Weight to be Driven (**W**)	kgf	*150.0 kgf*
Other Forces (F_1), (F_2) etc.	N	*0 N*
Shock Factor (**K**) Circle the value that best reflects the smoothness of your application.	Shockless Operation 1.0 Normal Operation 1.2 Operation with Impact 1.5 Operation with High Impact 2.5	*1.2*
Frictional Coefficient (**μ**) Circle the value that best reflects your application.	Profile Guide Rail 0.005 Ball Bearing Guide Rail 0.02 Polymer Bushing Guide 0.1 Bronze Bushing Guide 0.2	*0.01*

Other Key Application Information

Application Description:

Environmental Conditions: ☐ Typical Industrial ☐ High Humidity ☐ High Temperature ☐ High Dust

Positional Accuracy Requirements:

STEP 2: CALCULATING RPS REQUIREMENTS

Rack selection is based on the load capacity required by your application. Using the information gathered on the preceding page, perform the following calculations to determine the Total Force of the Load. Use the space provided to record your calculations. (The sample calculations assume a single pinion driving an axis. Use the Sample Data from the chart on the preceding page.)

Load Mass: $M = W$

Use the total Weight to be Driven as your Load Mass value.

Sample: *$M = 150.0\ kgf = 150\ kg$*

Load Mass

$M =$ _____ kg

Load Acceleration: $A = V_{max} \div t_A$

A known acceleration from a servo drive provider is preferred if available.

$A =$ _____ m/s ÷ _____ s

Sample: *$A = 0.5\ m/s \div 0.5\ s = 1.0\ m/s^2$*

Load Acceleration

$A =$ _____ m/s^2

Force Due to Load Acceleration: $F_A = M \cdot A$

$F_A =$ _____ kg • _____ m/s^2

Sample: *$F_A = 150\ kg \cdot 1.0\ m/s^2 = 150.0\ N$*

Force Due to Load Acceleration

$F_A =$ _____ N

Force Due to Gravity: $F_G = M \cdot g \cdot \sin(\theta_H)$

$F_G =$ _____ kg • 9.81 m/s^2 • sin(_____)

Sample: *$F_G = 150\ kg \cdot 9.81\ m/s^2 \cdot \sin(60°) = 1274.4\ N$*

Force Due to Gravity

$F_G =$ _____ N

Force Due to Friction: $F_F = M \cdot \mu \cdot g \cdot \cos(\theta_H)$

$F_F =$ _____ kg • _____ • 9.81 m/s^2 • cos(_____)

Sample: *$F_F = 150\ kg \cdot 0.01 \cdot 9.81\ m/s^2 \cdot \cos(60°) = 7.4\ N$*

Force Due to Friction

$F_F =$ _____ N

Sum of Forces: $F_S = F_A + F_G + F_F + F_1 + F_2 + \ldots etc$

$F_S =$ _____ N + _____ N + _____ N + _____ N + _____ N

Sample: *$F_S = 150.0\ N + 1274.4\ N + 7.4\ N = 1431.8\ N$*

Sum of Forces

$F_S =$ _____ N

Total Force with Shock Factor: $F_T = F_S \cdot K$

$F_T =$ _____ N • _____

Sample: *$F_T = 1431.8\ N \cdot 1.2 = 1718.2\ N$*

Total Force with Shock Factor

$F_T =$ _____ N

STEP 3: SELECTING A RACK MODEL

Use Table 4 in the RPS System section to review the six different rack models and determine the model best suited for your application.

Rack Model

_____

STEP 4: SELECTING RACK SIZE

Locate your chosen rack model in Table 1 in the RPS System section and determine the rack size with enough thrust capacity to handle the Total Force with Shock Factor calculated above for your application.

Rack Size

_____

STEP 5: EVALUATE LIFE AND VERIFY YOUR SYSTEM SPECIFICATIONS

*With the rack model and size selections, evaluate expected life in the **System Life** section and review the Common Rack Specifications (Table 5 in the Rack Section) to be sure that the rack you have selected will meet all of your application requirements.*

Rack Product Number

_____

Rack Specifications

Table 5 Common Rack Specifications

Attribute \ Rack Size			RPS10	RPS12	RPS16		RPS20		RPS25		RPS32		RPS40		RPS4014	
Max Pressure Angle		°	26.4	26.4	27.9		26.4		26.4		26.0		26.0		26.0	
Avg Pressure Angle		°	21.9	21.9	23.4		21.9		21.9		22.7		21.3		20.9	
Module		mm	3.0	3.6	4.8		6.0		7.5		9.5		12.0		12.0	
Max Speed *	All Metal Racks	m/s	4	8	4		5		8		11		6		6	
	Versa Rack	m/s	NA	NA	2		2		2		NA		NA		NA	
Rack Tooth Pitch		mm	10	12	16		20		25		32		40		40	
Rack Height		mm	27	27	30.5		42.0		48.0		57.0		72.6		69.0	
Rack Width		mm	5.7	5.7	11.5		15.5		18.5		24.5		31.5		42.0	
Rack Section Size			Half	Half	Half	Full	Half	Full	Half	Full	Half	Full	Half	Full	Half	Full
Rack Length		mm	480	480	512	992	500	1000	500	1000	512	992	520	1000	520	1000
Number of Rack Teeth			48	40	32	62	25	50	20	40	16	31	13	25	13	25
Rack Weight	All Metal Racks	kg	0.5	0.6	1.1	2.1	2.1	4.1	2.7	5.4	4.2	8.2	6.9	13.2	8.8	17.0
	Versa Rack	kg	NA	NA	0.2	0.4	0.4	0.8	0.5	1.0	NA		NA		NA	

* The maximum rated speed of a RPS system is equal to the lowest rating of either the pinion or the rack.

Rack Dimensions

All dimensions shown in mm.

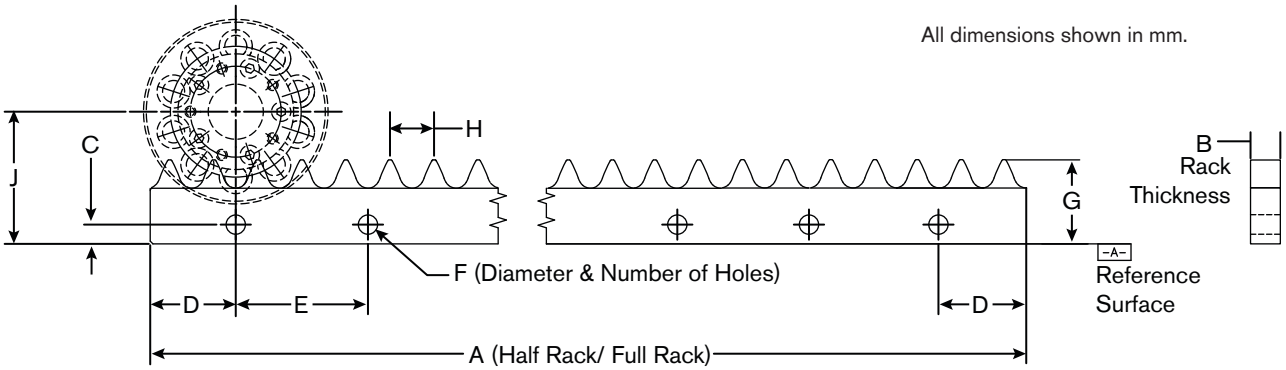

RPS Size	A		B	C	D	E	F			G	H	J
	Rack Length		Rack Thickness	Hole Height	Hole From End	Hole Spacing	Mounting Holes			Rack Height	Tooth Pitch	Axis to Base
	Half	Full					Ø	# Half Rack	# Full Rack			
RPS10	480	NA	5.7	7	29.8	60	5.5	8	NA	27.0	10	37.5
RPS12	480	NA	5.7	7	29.8	60	5.5	8	NA	27.0	12	40
RPS16	512	992	11.5	7	16	96	7	6	11	30.5	16	48
RPS20	500	1000	15.5	10	50	100	9	5	10	42.0	20	64
RPS25	500	1000	18.5	12	50	100	11	5	10	48.0	25	75
RPS32	512	992	24.5	14	16	96	14	6	11	57.0	32	102
RPS40	520	1000	31.5	16	80	120	18	4	8	72.6	40	129
RPS4014	520	1000	42.0	16	60	80	18	6	12	69.0	40	140

See drawings or CAD models on Nexen's website for additional dimensions and tolerances.

Rack Product Numbers

RPS Size	Rack Length		Premium	Standard	Endurance	Universal	Universal Uncoated Stainless	Universal Coated Stainless	Versa
10	Half	480 mm	966768	NA	NA	NA	Contact Nexen	Contact Nexen	NA
	Alignment Tool		966507						
12	Half	480 mm	966769	NA	NA	NA	Contact Nexen	Contact Nexen	NA
	Alignment Tool		966508						
16	Half	512 mm	966652	966602	Contact Nexen	966801	966760	966742	Contact Nexen
	Full	992 mm	966651	966601	966850	966800	966813	966741	966860
	Alignment Tool		966503						
20	Half	500 mm	966662	966612	Contact Nexen	966803	Contact Nexen	Contact Nexen	Contact Nexen
	Full	1000 mm	966661	966611	966851	966802	966625	966619	966861
	Alignment Tool		966513						
25	Half	500 mm	966672	966622	Contact Nexen	966805	Contact Nexen	Contact Nexen	Contact Nexen
	Full	1000 mm	966671	966621	966852	966804	966814	966755	966862
	Alignment Tool		966523						
32	Half	512 mm	966682	966632	Contact Nexen	966807	Contact Nexen	Contact Nexen	NA
	Full	992 mm	966681	966631	966853	966806	966812	Contact Nexen	NA
	Alignment Tool		966533						
40	Half	520 mm	966692	966642	Contact Nexen	966809	Contact Nexen	Contact Nexen	NA
	Full	1000 mm	966691	966641	966854	966808	966815	Contact Nexen	NA
	Alignment Tool		966543						
4014	Half	520 mm	966695	966647	Contact Nexen	966811	Contact Nexen	Contact Nexen	NA
	Full	1000 mm	966694	966646	966855	966810	966816	Contact Nexen	NA
	Alignment Tool		966543						
Rack Grease			853901						

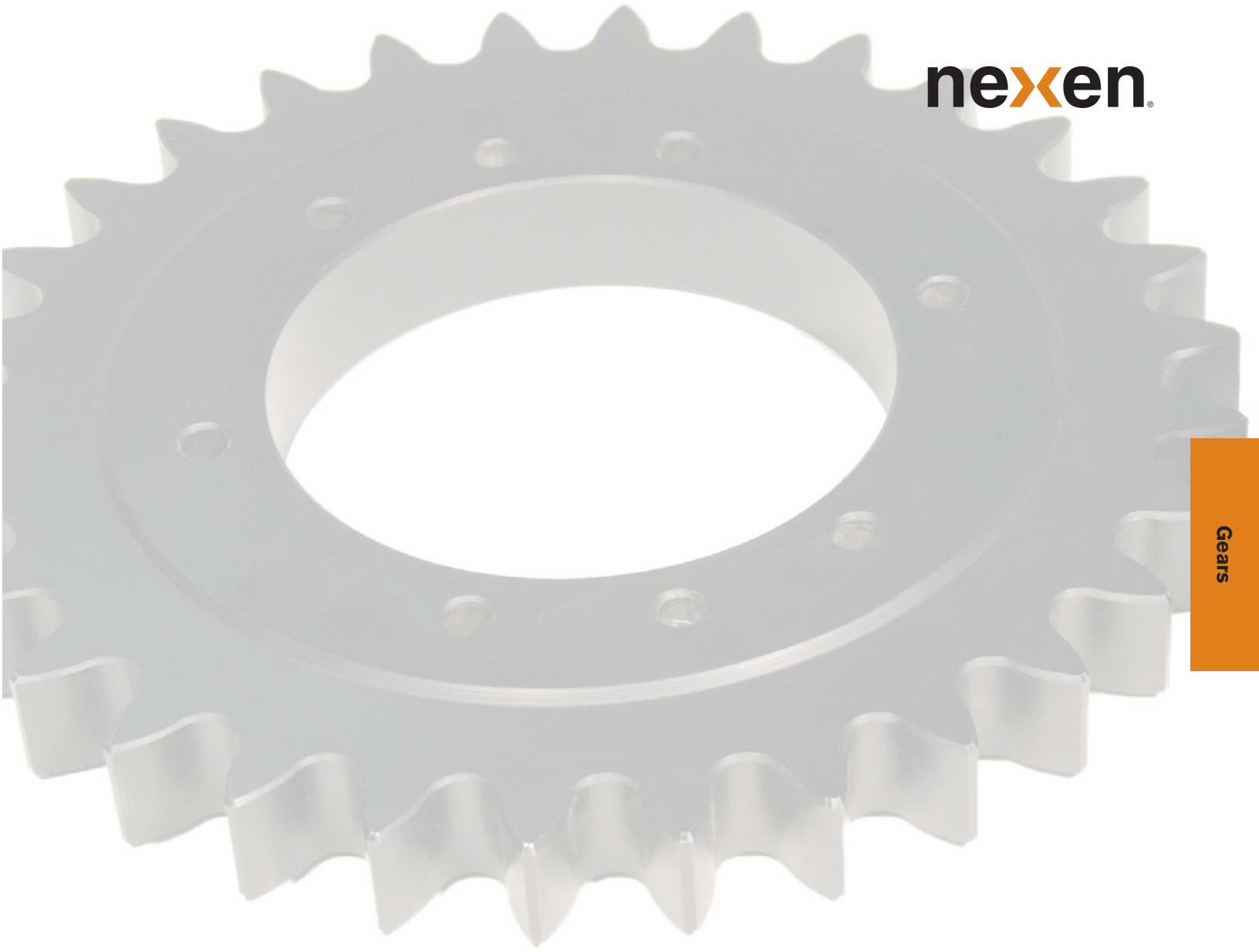

RPG GEARS

Nexen offers the RPG Gears as solid rings up to 1.7 m in diameter. Segmented rings or arcs can also be combined to create your own custom rotary drive system.

Gear Selection Process 16

Application Data 16

Calculations 17

Specifications 18

Dimensional Drawings 19

Product Numbers 19

PATENTED

Rotary Gear Selection Process

Nexen offers both gears and individual arc segments for unlimited possibilities in your machine design. Take advantage of the following guide designed to make selecting the right components for your system simple.
If you don't find what you need, contact Nexen Group about a custom design.

STEP 1: GATHER APPLICATION DATA

Before you begin calculations, there are key measurements that you will need from your application. Collect the data and record it in the chart below. With this data available you can proceed on to the calculations on the following page.

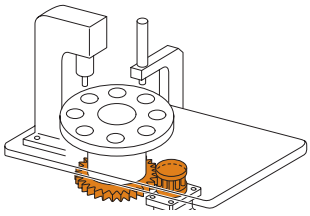

Measurements Required for RPG Selection	Customer Data (record your values below)	*Sample Data*
Angle Gear Rotates Relative to Horizontal Plane (θ_H)	°	*0°*
Rotational Moment of Inertia (**I**)	kgm^2	*10.0 kgm^2*
Indexes Per Revolution (N_I)	IPR	*8 IPR*
Indexes Per Day (N_{day})		*10800 RPD*
Index Time (t_I) or Known Angular Acceleration (α)	seconds rad/s^2	*0.66 sec*
Weight to be Driven (**W**) Should include everything in motion.	kg	*20.0 kg*
Dwell Time (t_D)	seconds	*0.33 sec*
Maximum Allowable Ring Gear OD (D_{max})	mm	*400 mm*
Minimum Allowable Ring Gear ID (D_{min})	mm	*200 mm*
Ring Gear Tooth Orientation (Select one)	external/internal	*external*
Other Forces (T_1), (T_2) etc. May include gravitational forces due to imbalanced load, springs, wind, counterbalance, fluid dampening systems, etc.	Nm	*0 Nm*
Shock Factor (**K**) Circle the value that best reflects the smoothness of your application.	Shockless Operation 1.0 Normal Operation 1.2 Operation with Impact 1.5 Operation with High Impact 3.0	*1.2*
Frictional Coefficient (μ) Circle the value that best reflects your application.	Rolling Bearing 0.005~0.02 Sliding Bearing 0.1~0.2	*0.01*
Diameter of Bearing Element (D_B)	mm	*50 mm*

SAMPLE APPLICATION INFORMATION

- *Electronics Assembly Indexing Table*
- *1 meter in diameter*
- *8 stations equally spaced*
- *60 indexes per minute desired*
- *Dwell time 0.33 sec*

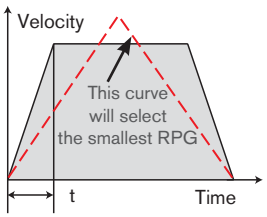

Acceleration based on time is linear and may not reflect the actual curve. All calculations assume constant acceleration.

Other Key Application Information

Application Description:

Environmental Conditions: ☐ Typical Industrial ☐ High Humidity ☐ High Temperature ☐ High Dust

Positional Accuracy Requirements:

STEP 2: CALCULATING RPG REQUIREMENTS FOR SIMPLE INDEXING APPLICATIONS

Gear selection is based on the load capacity required by your application. Using the information gathered on the preceding page, perform the following calculations. If acceleration or deceleration times vary, or there are other changes in velocity, calculate the acceleration torque for each interval and use the highest value for RPG selection purposes.

ACCELERATION TIME: $t_A = t_I \div 2$

$t_A =$ _____ sec $\div 2$

Sample: $t_A = 0.66$ seconds $\div 2 = 0.33$ seconds

ACCELERATION TIME
$t_A =$ _____ sec

ROTATION ANGLE PER INDEX: $\theta = 2\pi \div N_I$

$\theta = 2\pi \div$ _____ IPR

Sample: $\theta = 2\pi \div 8$ IPR $= 0.785$ rad

ROTATION ANGLE PER INDEX
$\theta =$ _____ rad

MAX ANGULAR SPEED: $\omega = \theta \div t_I \bullet 2$

$\omega =$ _____ rad $\div$ _____ sec $\bullet 2$

Sample: $\omega = 0.785$ rad $\div 0.66$ seconds $\bullet 2 = 2.380$ rad/sec

MAX ANGULAR SPEED
$\omega =$ _____ rad/sec

ANGULAR ACCELERATION: $\alpha = \omega \div t_A$

$\alpha =$ _____ rad/sec $\div$ _____ sec

Sample: $\alpha = 2.380$ rad/sec $\div 0.33$ sec $= 7.212$ rad/s^2

ANGULAR ACCELERATION
$\alpha =$ _____ rad/s^2

RING GEAR TORQUE: $T_{gear} = (I \bullet \alpha) + ((W \bullet g \bullet \mu \bullet D_B) \div 2000)$

$T_{gear} = ($ _____ kgm^2 $\bullet$ _____ rad/s^2 $) + (($ _____ kg $\bullet$ 9.81 m/s^2 $\bullet$ _____ $\bullet$ _____ mm $) \div 2000)$

Sample: $T_{gear} = (10$ kgm$^2 \bullet 7.212$ rad/s$^2) + ((20$ kg $\bullet 9.81$ m/s$^2 \bullet 0.01 \bullet 50$ mm$) \div 2000) = 72.17$ Nm

RING GEAR TORQUE
$T_{gear} =$ _____ Nm

RING GEAR TORQUE WITH SHOCK FACTOR: $T_T = T_{gear} \bullet K$

$T_T =$ _____ Nm $\bullet$ _____

Sample: $T_T = 72.17$ Nm $\bullet 1.2 = 86.6$ Nm

RING GEAR TORQUE W/ SHOCK FACTOR
$T_T =$ _____ Nm

PINION THRUST REQUIRED AT MAX OD: $F_1 = (T_T \div D_{max}) \bullet 2000$

$F_1 = ($ _____ Nm $\div$ _____ mm $) \bullet 2000$

Sample: $F_1 = (86.6$ Nm $\div 400$ mm$) \bullet 2000 = 433$ N

PINION THRUST REQUIRED AT MAX OD
$F_1 =$ _____ N

PINION THRUST REQUIRED AT MIN ID: $F_2 = (T_T \div D_{min}) \bullet 2000$

$F_2 = ($ _____ Nm $\div$ _____ mm $) \bullet 2000$

Sample: $F_2 = (86.6$ Nm $\div 200$ mm$) \bullet 2000 = 866$ N

PINION THRUST REQUIRED AT MIN ID
$F_2 =$ _____ N

STEP 3: SELECTING A GEAR SIZE

Using the table to the right, circle the RPG size needed to meet the Pinion Thrust requirements of your application (as calculated above).

	RPG SIZE	10	12	16	20	25	32	40	4014
PREMIUM PINION Dynamic Thrust (N)	@ Min Life	250	500	2400	2900	4000	6300	6000	14000
	@ Max Life	250	500	1000	1500	2200	3600	6000	14000
VALUE PINION Dynamic Thrust (N)		NA		500	750	1100	NA		

STEP 4: VERIFY YOUR SYSTEM SPECIFICATIONS

Using the selected RPG size and the Ring Gear Torque with Shock Factor requirement calculated above, use the tables on the next page to select a gear. Review Gear Specifications to ensure the selected gear meets all of your application requirements.

GEAR PRODUCT NUMBER

Gear Specifications

RPG Size	Gear Product Number	Gear Ratio	Pinion Type	Maximum Dynamic Torque @ Minimum Life Nm	Maximum Dynamic Torque @ Maximum Life Nm	Max Static Torque Nm	Max RPM	Accuracy ArcSec	Repeatability ArcSec
16	966566	3:1	PREMIUM	183.3	101.1	183.3	500	+/- 84.2	+/- 14
			VALUE	38.1	38.1	38.1	250	+/- 308.7	+/- 14.0
	966567	4:1	PREMIUM	244.4	134.8	244.4	375	+/- 63.4	+/- 10.6
			VALUE	50.8	50.8	50.8	188	+/- 232.5	+/- 10.6
	966568	5:1	PREMIUM	305.5	168.5	305.5	300	+/- 50.9	+/- 8.5
			VALUE	63.5	63.5	63.5	150	+/- 186.5	+/- 8.5
	966569	6:1	PREMIUM	366.6	202.2	366.6	250	+/- 42.5	+/- 7.1
			VALUE	76.2	76.2	76.2	125	+/- 155.7	+/- 7.1
	966570	7:1	PREMIUM	427.7	235.9	427.7	215	+/- 36.5	+/- 6.1
			VALUE	88.9	88.9	88.9	108	+/- 134.0	+/- 6.1
	966797	15:1	PREMIUM	916.5	505.5	916.5	100	+/- 16.9	+/- 2.8
			VALUE	190.5	190.5	190.5	50	+/- 62.1	+/- 2.8
	966571	40:1	PREMIUM	2444.0	1348.0	2444.0	38	+/- 6.4	+/- 1.1
			VALUE	508.0	508.0	508.0	19	+/- 23.4	+/- 1.1
20	966572	14:1	PREMIUM	1292.2	735.0	1337.0	108	+/- 14.4	+/- 2.4
			VALUE	334.6	334.6	334.6	43	+/- 52.6	+/- 2.4
	966798	15:1	PREMIUM	1384.5	787.5	1432.5	100	+/- 13.4	+/- 2.2
			VALUE	358.5	358.5	358.5	40	+/- 49.2	+/- 2.2
	966799	18:1	PREMIUM	1661.4	945.0	1719.0	84	+/- 11.2	+/- 1.9
			VALUE	430.2	430.2	430.2	34	+/- 41.2	+/- 1.9
	966793	54:1	PREMIUM	4984.2	2835.0	5157.0	28	+/- 3.7	+/- 0.6
			VALUE	1290.6	1290.6	1290.6	12	+/- 13.7	+/- 0.6
	966789	68.4:1	PREMIUM	6313.3	3591.0	6532.2	22	+/- 2.9	+/- 0.5
			VALUE	1634.8	1634.8	1634.8	9	+/- 10.7	+/- 0.5
	966787	90:1	PREMIUM	8307.0	4725.0	8595.0	17	+/- 2.2	+/- 0.4
			VALUE	2151.0	2151.0	2151.0	7	+/- 8.2	+/- 0.4
25	966573	3:1	PREMIUM	477.6	268.5	528.0	607	+/- 53.6	+/- 8.9
			VALUE	138.0	138.0	138.0	160	+/- 196.4	+/- 8.9
	966574	4:1	PREMIUM	636.8	358.0	704.0	455	+/- 40.1	+/- 6.7
			VALUE	184.0	184.0	184.0	120	+/- 147	+/- 6.7
	966575	5:1	PREMIUM	796.0	447.5	880.0	364	+/- 32.3	+/- 5.4
			VALUE	230.0	230.0	230.0	96	+/- 118.4	+/- 5.4
	966576	6:1	PREMIUM	955.2	537.0	1056.0	304	+/- 26.9	+/- 4.5
			VALUE	276.0	276.0	276.0	80	+/- 98.8	+/- 4.5
	966577	7.5:1	PREMIUM	1194.0	671.3	1320.0	243	+/- 21.5	+/- 3.6
			VALUE	345.0	345.0	345.0	64	+/- 78.9	+/- 3.6
	966578	48.6:1	PREMIUM	7737.1	4349.7	8553.6	38	+/- 3.3	+/- 0.6
			VALUE	2235.6	2235.6	2235.6	10	+/- 12.1	+/- 0.6
32	966638	4:1	PREMIUM	1540.0	874.8	1760.0	430	+/- 26.5	+/- 4.4
	966639	7.25:1	PREMIUM	2791.3	1585.6	3190.0	238	+/- 14.6	+/- 2.4
	966763	37.5:1	PREMIUM	14437.5	8201.3	16500.0	46	+/- 2.8	+/- 0.5
	966778	63.3:1	PREMIUM	24383.3	13851.0	27866.7	28	+/- 1.7	+/- 0.3
40	966791	4:1	PREMIUM	1833.6	1833.6	3667.2	188	+/- 21.0	+/- 3.5
	966549	16.7:1	PREMIUM	7640.0	7640.0	15280.0	45	+/- 5.0	+/- 0.8
4014	966818	3:1	PREMIUM	3743.4	3743.4	5614.8	215	+/- 23.8	+/- 4.0
	966696	5.14:1	PREMIUM	6417.3	6417.3	9625.4	126	+/- 14.0	+/- 2.3
	966725	13.7:1	PREMIUM	17112.7	17112.7	25667.7	47	+/- 5.2	+/- 0.9

Common Attributes for All Gears

Estimated Life	See ***System Life*** section.
Operating Temperature Range °C	-5 to 40
Tooth Grease	Part Number 853901

Gear Dimensions & Specifications by Product Number

Figure A

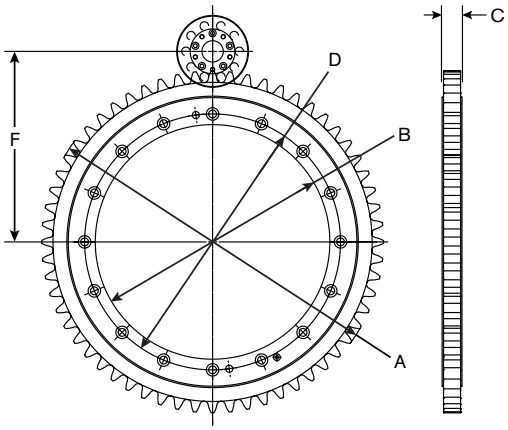

Figure B

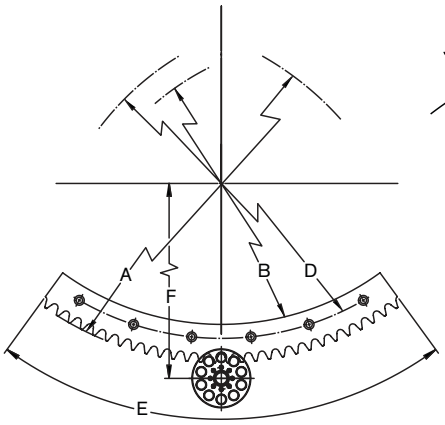

Figure C

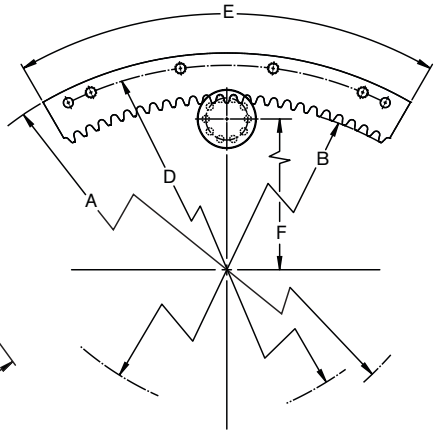

Basic gear dimensions shown for selection purposes only and subject to change. Go to www.nexengroup.com for detailed drawings and CAD models. If none of the products below meet your needs, contact Nexen and one can be designed to your specifications. Due to the variety of gears and gear segments, these products are made to order. Please contact Nexen for lead times.

Dimensions shown in ***mm*** unless otherwise noted.

RPG Size	Gear Product Number	Alignment Tool Product Number	Teeth Orientation	Number of Teeth	Moment of Inertia	Weight	Figure	Coating	A	B	C	D	E	F
									Outer	Inner	Max Width	Bolt Circle Ø	Arc Length/ Full Ring	Distance from Center
				segment/ring	kgm^2	kg			Diameter					
16	966566	NA	external	NA/30	0.004	1.2	A	Hard Chrome	161	70	11.5	90	360°/yes	98
	966567	NA	external	NA/40	0.01	1.7	A	Hard Chrome	209	120	11.5	145	360°/yes	122
	966568	NA	external	NA/50	0.03	2.4	A	Hard Chrome	257	160	11.5	180	360°/yes	146
	966569	NA	external	NA/60	0.05	3.4	A	Hard Chrome	305	190	11.5	220	360°/yes	170
	966570	NA	external	NA/70	0.08	3.3	A	Hard Chrome	352	260	11.5	285	360°/yes	193.5
	966797	966557	external	30/150	0.19*	1.6*	B	Hard Chrome	745	652	11.5	670	72°/yes	390
	966571	966656	external	25/400	1.64*	1.8*	B	Hard Chrome	1954	1830	11.5	1870	22.5°/yes	995
20	966572	966706	external	28/140	0.48*	2.9*	B	Hard Chrome	880	770	15.5	810	72°/yes	462
	966798	966615	internal	25/150	0.86*	3.6*	C	Hard Chrome	1038	906	15.5	1013	60°/yes	430
	966799	966734	external	30/180	0.76*	2.7*	B	Hard Chrome	1120	1020	15.5	1060	60°/yes	582
	966793	966794	external	30/540	9.57*	3.6*	B	Hard Chrome	3338	3220	15.5	3250	20°/yes	1692
	966789	966790	internal	19/684	14.9*	3.2*	C	Hard Chrome	4400	4241	15.5	4354	10°/yes	2098
	966787	966788	external	30/900	36.3*	4.9*	B	Hard Chrome	5554	5392	15.5	5438	12°/yes	2800
25	966573	NA	external	NA/30	0.04	4.5	A	Hard Chrome	254	120	18.5	145	360°/yes	154
	966574	NA	external	NA/40	0.12	6.8	A	Hard Chrome	331	190	18.5	220	360°/yes	193
	966575	NA	external	NA/50	0.25	9.1	A	Hard Chrome	404	260	18.5	285	360°/yes	230
	966576	NA	external	NA/60	0.47	11.5	A	Hard Chrome	480	330	18.5	360	360°/yes	268
	966577	NA	external	NA/75	0.93	13.5	A	Hard Chrome	596	460	22.5	490	360°/yes	326
	966578	966740	external	27/486	15.7*	4.6*	B	Hard Chrome	3760	3640	18.5	3684	20°/yes	1908
32	966638	NA	external	NA/48	0.69	16.6	A	Hard Chrome	493	330	24.5	360	360°/yes	292
	966639	NA	external	NA/87	4.4	27.8	A	Black Oxide	874	730	24.5	770	360°/yes	482
	966763	966685	external	18/450	35.7*	7.7*	B	Hard Chrome	4400	4220	24.5	4280	14.4°/yes	2246
	966778	966779	external	19/760	112.8*	8.4*	B	Hard Chrome	7428	7250	24.5	7310	9°/yes	3760
40	966791	NA	external	NA/48	2.5	39.2	A	Hard Chrome	622	390	35.5	430	360°/yes	369
	966549	966546	external	11/200	9.1*	6.4*	B	Hard Chrome	2482	2320	31.5	2360	19.8°/no	1300
4014	966818	NA	external	NA/42	1.69	31.5	A	Hard Chrome	551	390	46	430	360°/yes	346
	966696	966547	external	18/72	2.82*	17.3*	B	Hard Chrome	916	711.2	42	785	90°/yes	529
	966725	966548	external	12/192	12.5*	9.4*	B	Hard Chrome	2392	2230	42	2270	22.5°/yes	1268

* Per Segment



RPS ROLLER PINION

Once you have selected your rack/gear, finding the right pinion is easy. The following pages offer step-by-step selection instructions as well as pinion specifications and details on accessories.

Pinion Selection Process 22

Specifications 22

Dimensional Drawings 23–26

Pinion Accessories

- Adapters 27
- Preloaders 27–29

PATENTED

RPS Pinion Selection Process

STEP 1: *Determine your rack/gear size and find the same RPS pinion size. Always use the same size rack/gear and pinion.*

STEP 2: *Select the material best suited for your application. (Other materials available upon request.)*

Hard Chrome: alloy steel with a thin, dense chrome coating
Nickel: alloy steel with nickel plating
Stainless: stainless steel with or without a hard chrome coating

STEP 3: *Select Mounting Style: For easy installation and maximum versatility, Nexen recommends using the flange-mounted version when practical.*

Shaft Mount
- Shaft Coupling or Shaft & Keyway mounting option
- Coupling option uses a keyless mechanical compression coupling to secure to shaft
- Available in multiple bore diameters. Contact Nexen.

Flange Mount
- Conforms to ISO 9409 specifications
- Nexen adapter preloader options available with this version

Pinion Type	RPS Size	Number of Rollers	Distance per Revolution	Pitch Circle Diameter	Max RPM *	Product Number	Base Material/ Coating	Mount Style	Bore Size	Mass	Moment of Inertia
			mm	mm					mm	kg	kgm^2x10^{-4}
PREMIUM PINIONS	10	10	100	31.8	2400	966484	Hard Chrome	Shaft Coupling	12	0.2	0.4
	12	10	120	38.2	4000	966490	Hard Chrome	Shaft Coupling	16	0.3	1.0
	16	10	160	50.9	1500	966819	Nickel	Shaft Coupling	16	0.7	3.9
						966650	Nickel	Shaft Coupling	20	0.7	3.9
						966761	Stainless	Shaft Coupling	20	0.7	3.9
						966687	Nickel	Flange	N/A	0.8	4.0
						966759	Stainless	Flange	N/A	0.8	4.0
	20	10	200	63.7	1500	966820	Nickel	Shaft Coupling	22	1.4	10.6
						966660	Nickel	Shaft Coupling	25	1.3	10.5
						966771	Stainless	Shaft Coupling	25	1.3	10.5
						966675	Nickel	Flange	N/A	1.2	10.2
						Request	Stainless	Flange	N/A	1.2	10.2
	25	10	250	79.6	1820	966670	Nickel	Shaft Coupling	30	2.1	25.5
						966758	Stainless	Shaft Coupling	30	2.1	25.2
						966673	Nickel	Flange	N/A	2.1	25.2
						Request	Stainless	Flange	N/A	2.1	25.2
	32	12	384	122.2	1719	966821	Nickel	Shaft Coupling	32	7.3	173.0
						966822	Nickel	Shaft Coupling	40	6.8	171.0
						966680	Nickel	Shaft Coupling	45	6.4	169.0
						Request	Stainless	Shaft Coupling	45	6.4	169.0
						966677	Nickel	Flange	N/A	6.6	168.0
						Request	Stainless	Flange	N/A	6.6	168.0
	40	12	480	152.8	750	966823	Nickel	Shaft Coupling	55	12.9	598.0
						966690	Nickel	Shaft Coupling	60	12.4	594.0
						Request	Stainless	Shaft Coupling	60	12.4	594.0
						966697	Nickel	Flange	N/A	15.5	665.0
						Request	Stainless	Flange	N/A	15.5	665.0
	4014	14	560	178.3	643	966824	Nickel	Shaft Coupling	55	21.4	1184.0
						966693	Nickel	Shaft Coupling	60	20.9	1180.0
						Request	Stainless	Shaft Coupling	60	20.9	1180.0
						966700	Nickel	Flange	N/A	23.5	1306.0
						Request	Stainless	Flange	N/A	23.5	1306.0
VALUE PINIONS	16	10	160	50.9	750	966826	Aluminum	Shaft & Keyway	16	0.4	2.4
	20	10	200	63.7	600	966827	Aluminum	Shaft & Keyway	16	0.7	6.0
	25	10	250	79.6	480	966828	Aluminum	Shaft & Keyway	22	1.1	14.7

* The maximum rated speed of a RPS system is equal to the lowest rating of either the pinion or the rack.

See the ***Definitions*** section for more information on these attributes.

Common Attributes for All Pinions	
Estimated Life	See ***System Life*** section.
Operating Temperature Range °C	-5 to 40
Lubrication/Tooth Grease	Part Number 853901

Pinion Dimensions

Additional Dimensions

The Pinion dimensions listed here are for selection purposes only. For detailed drawings and CAD models, please visit www.nexengroup.com.

Pinion Adapters

Pinion adapters allow the pinion to mount to one frame-size larger of a reducer. Moving up a reducer size is sometimes needed due to reducer availability or motor sizing reasons. All Nexen pinion adapters are made from corrosion resistant materials or coatings. For your convenience, we have included pinion adapter dimensions next to each ISO9409 flange mounted pinion. See Table 6 for pinion adapter part numbers.

RPS10 Premium Pinion

Shaft Mounted Pinion

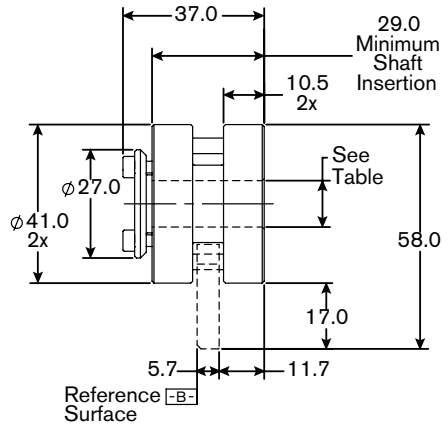

RPS12 Premium Pinion

Shaft Mounted Pinion

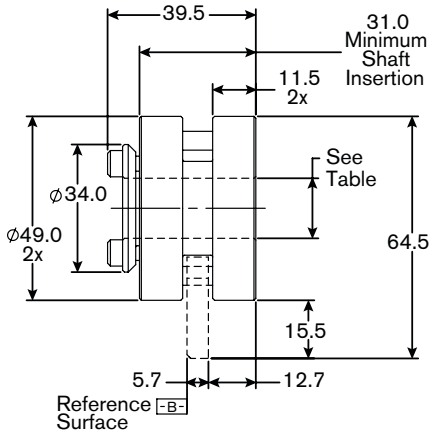

Pinion Dimensions

RPS16 Premium Pinion

Shaft Mounted Pinion

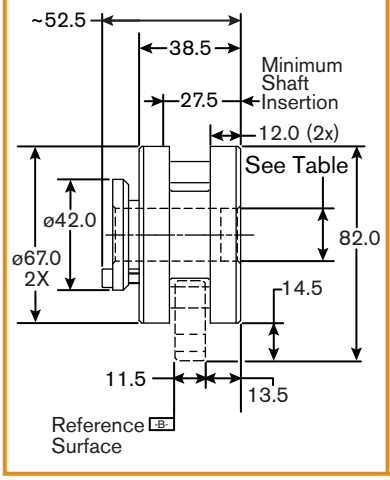

ISO 9409 Flange Mount Pinion

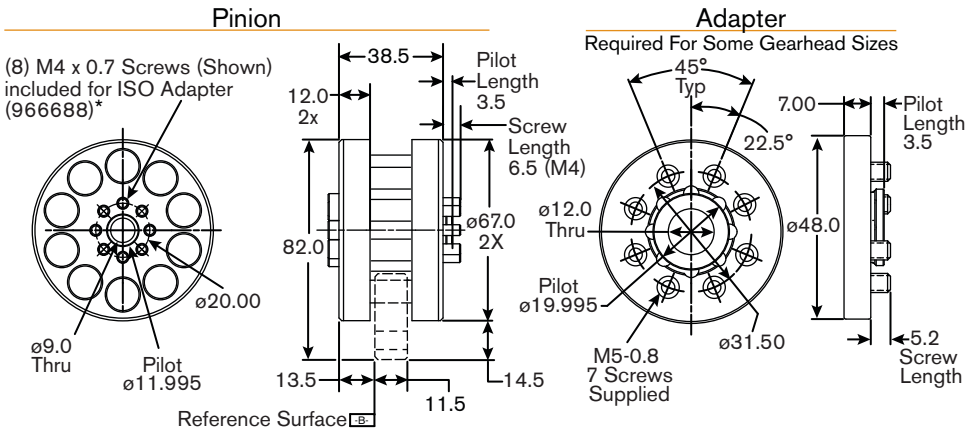

*(4) M3 x 0.5 x 45 mm screws (Not Shown) included for use with APEX AD047

RPS16 Value Pinion

Note: See product drawing for keyway specifications.

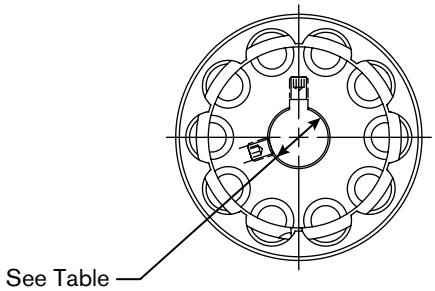

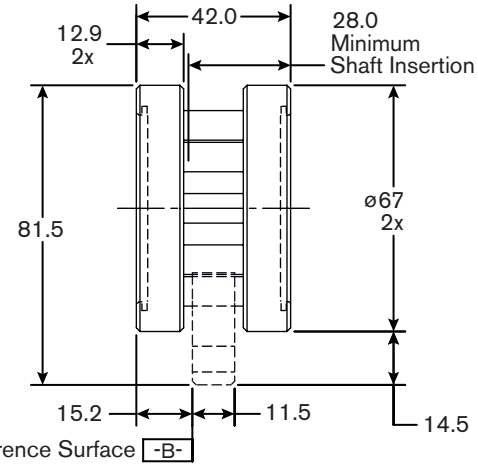

Shaft & Keyway Pinion

RPS20 Premium Pinion

Shaft Mounted Pinion

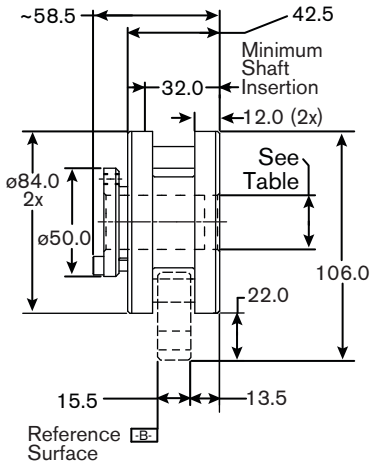

ISO 9409 Flange Mount Pinion

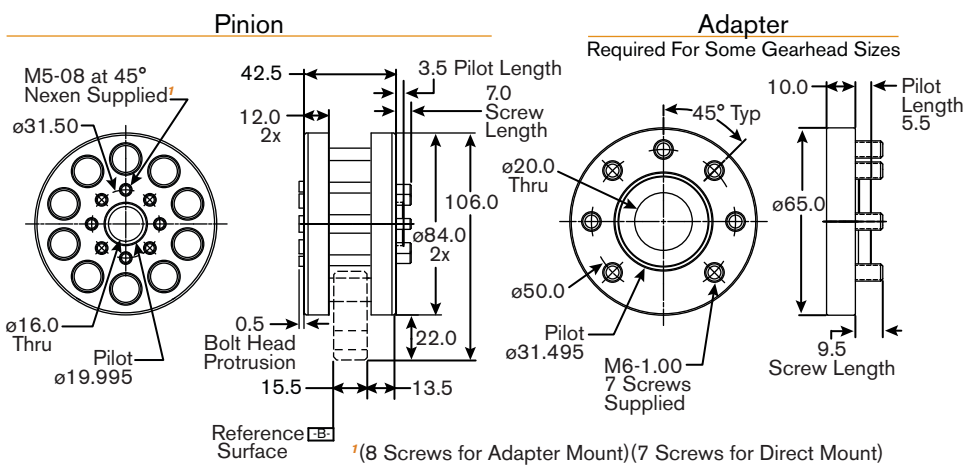

1(8 Screws for Adapter Mount)(7 Screws for Direct Mount)

Pinion Dimensions

RPS20 Value Pinion

Note: See product drawing for keyway specifications.

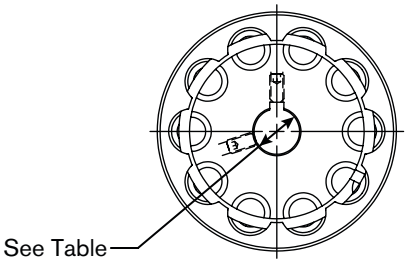

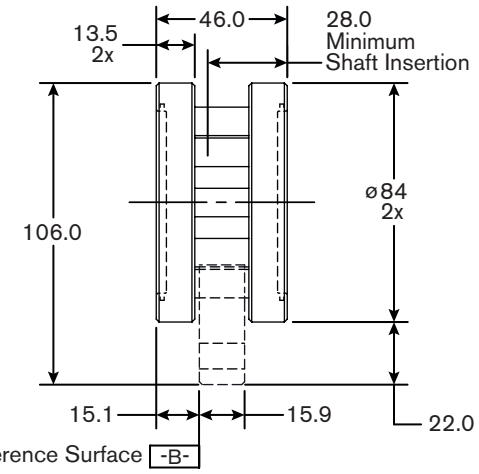

Shaft & Keyway Pinion

RPS25 Premium Pinion

Shaft Mounted Pinion

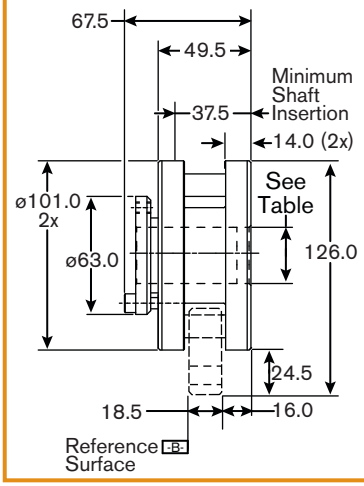

ISO 9409 Flange Mount Pinion

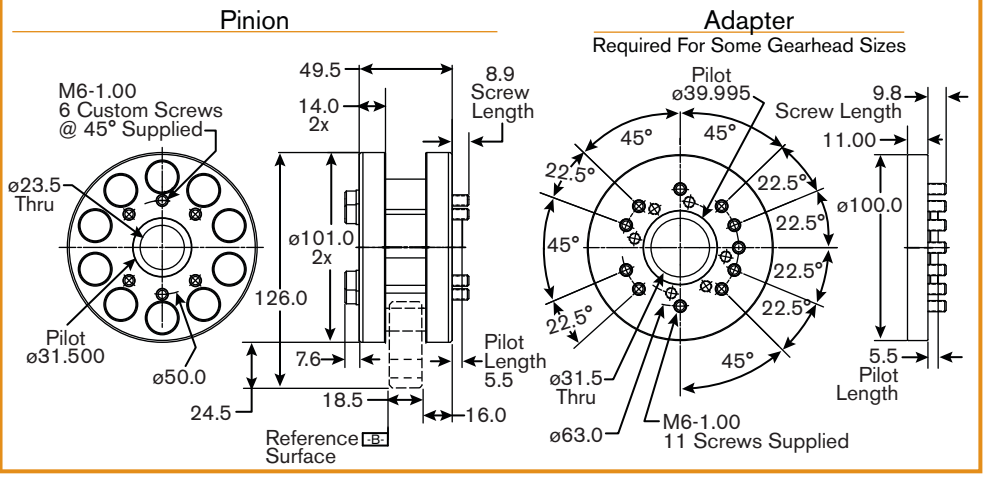

RPS25 Value Pinion

Note: See product drawing for keyway specifications.

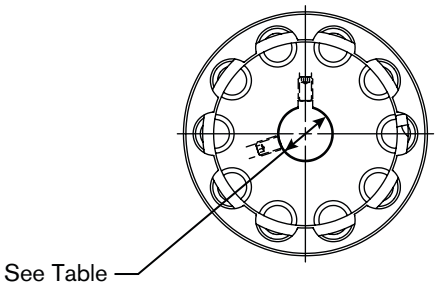

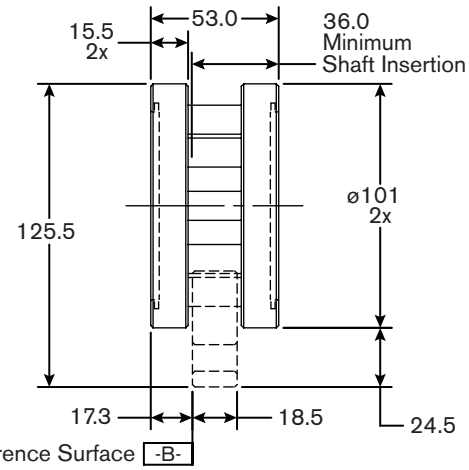

Shaft & Keyway Pinion

Pinion Dimensions

RPS32 Premium Pinion

Shaft Mounted Pinion

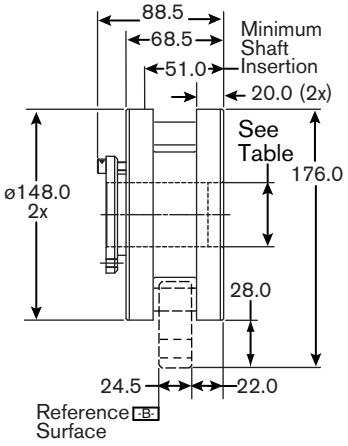

ISO 9409 Flange Mount Pinion

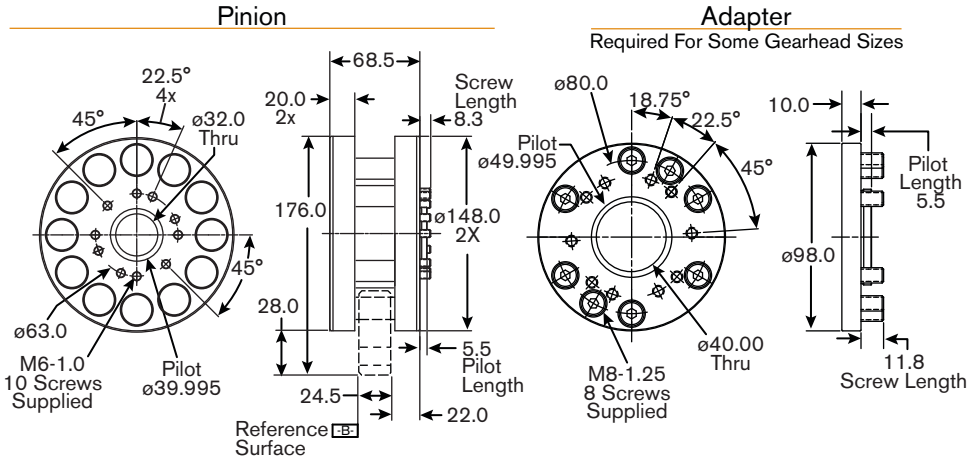

RPS40 Premium Pinion

Shaft Mounted Pinion

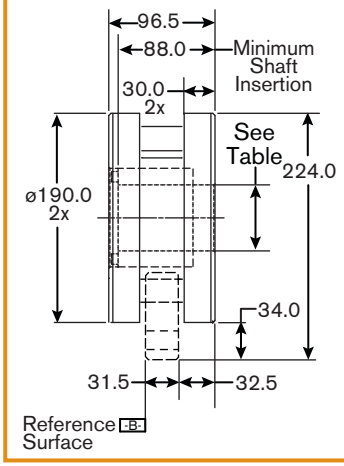

ISO 9409 Flange Mount Pinion

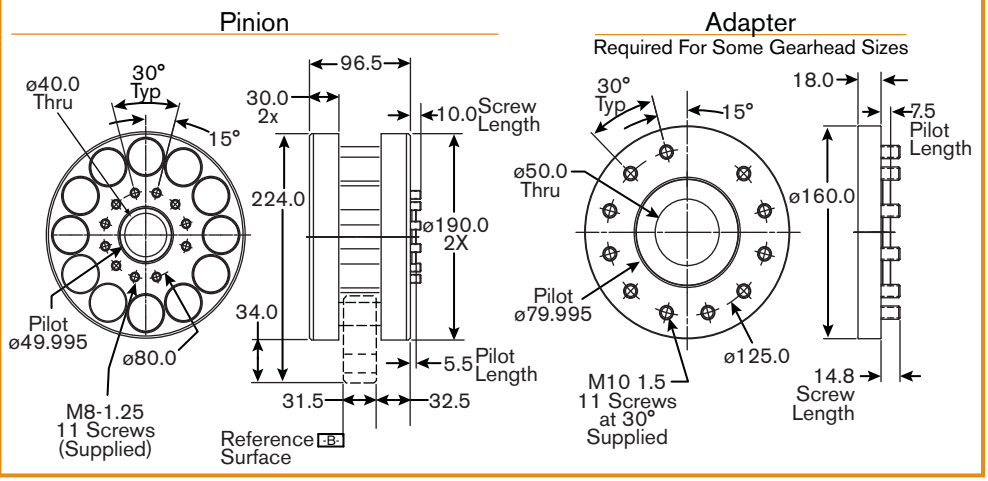

RPS4014 Premium Pinion

Shaft Mounted Pinion

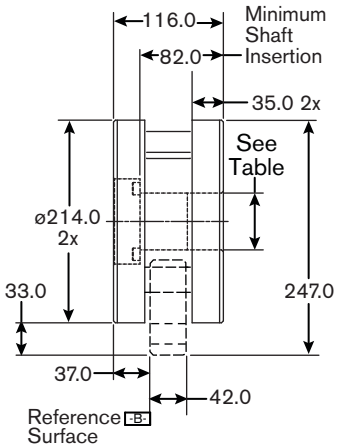

ISO 9409 Flange Mount Pinion

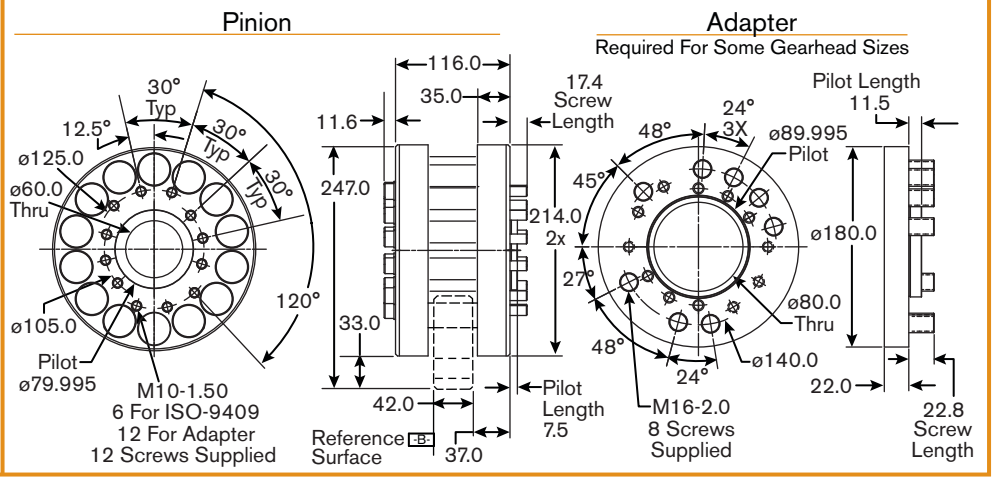

Pinion Preloader

Pair Nexen's Flange-Mount Pinion with our RPS Pinion Preloader for easy integration into your machine design. Preloaders feature an adjuster that allows the pinion to be moved up or down into the rack while keeping the pinion properly oriented to the rack. The pilot in the adjuster plate accommodates common servo gearhead sizes from your favorite servo gearhead manufacturer.

Preloader and Adapter components are either made from corrosion-resistant stainless steel, nickel, or zinc plating.

FEATURES:

- High-Precision Ground Surfaces
- Allows Perpendicular Movement
- Corrosion Resistant Materials

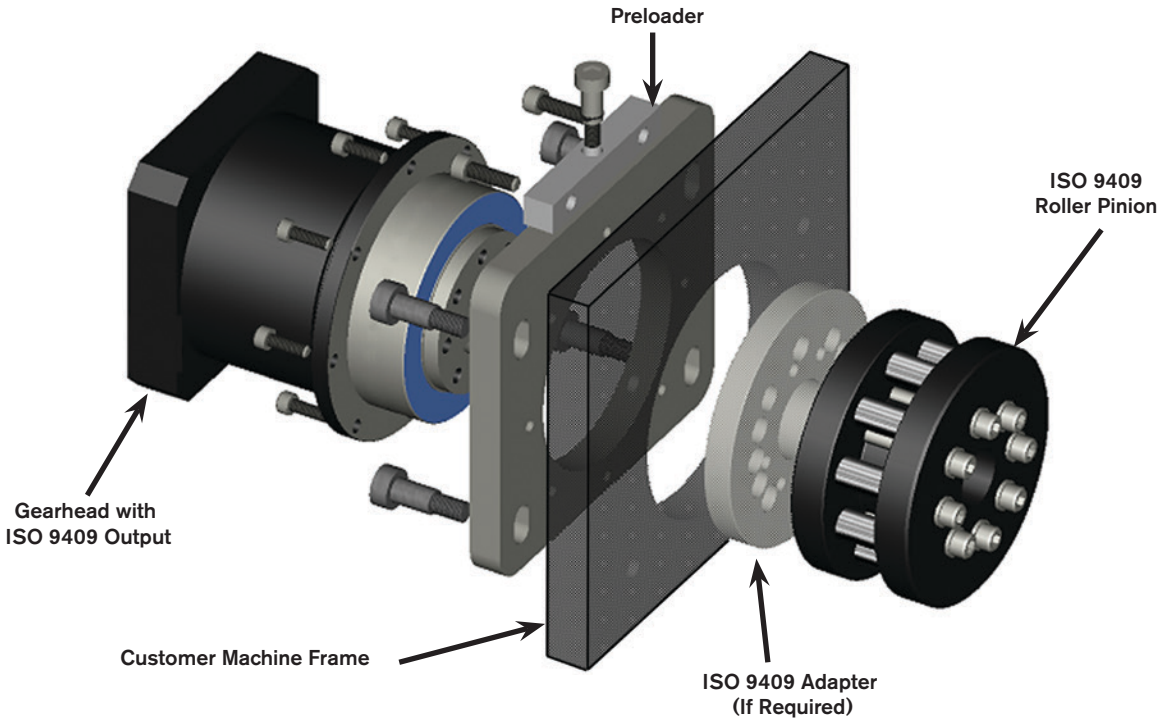

SELECTING PINION ADAPTERS AND PRELOADERS

If directly mounting the pinion to the reducer:
Disregard the Pinion w/ Adapter column and select the preloader and gearhead for your RPS Pinion size.

If going up a reducer frame size:
Start in the Pinion w/ Adapter column and select the compatible pinion, adapter, preloader and gearhead.

Table 6 Gearhead Compatibility Table

Pinion Size	Pinion w/ Adapter (not required in some applications)	Pinion Preloader	Customer Provided Gearhead								
			Alpha/ Wittenstein	APEX	GAM	Mijno	Neugart	Nidec-Shimpo	SEW-Euro	Stöber	Sumitomo
RPS16	N/A	N/A	N/A	AD047	N/A	N/A	N/A	VRT047	N/A	N/A	N/A
RPS20	RPS16 & 966688	960851	TP004	AD064	N/A	BDB 085	PLFE/N 64	VRT064	PSBF221/2	PH/A/KX 321/2	N/A
RPS25	RPS16 & 966865 RPS20 & 966676	960850	TP010	AD090	SPH-F75	BDB 120	PLFE/N 90	VRT090	PSBF321/2	PH/A/KX 421/2	PNFX080
RPS32	RPS16 & 966834 RPS25 & 966674	960852	TP025	AD110	SPH-F100	BDB 145	PLFE/N 110	VRT110	PSBF521/2	PH/A/KX 521/2	PNFX250
RPS40	RPS32 & 966668	960853	TP050	AD140	SPH-F140	BDB 180	PLFN 140	VRT140	PSBF621/2	PH/A/KX 721/2	PNFX450
RPS4014	RPS40 & 966698	960854	TP110	AD200	N/A	BDB 250	PLFN 200	VRT200	PSBF721/2	PH/A/KX 821/2	N/A
N/A	RPS4014 & 966701	N/A	N/A	N/A	N/A	N/A	N/A	N/A	N/A	PH/A/KX 912/23	N/A
N/A	RPS4014 & 966848	N/A	N/A	AD255	N/A	N/A	N/A	VRT255	N/A	N/A	N/A

This is a partial list. Other gearheads may apply.

Preloader Dimensions

RPS-PRE-ISO-064-3 Product Number 960851

Preloader Details

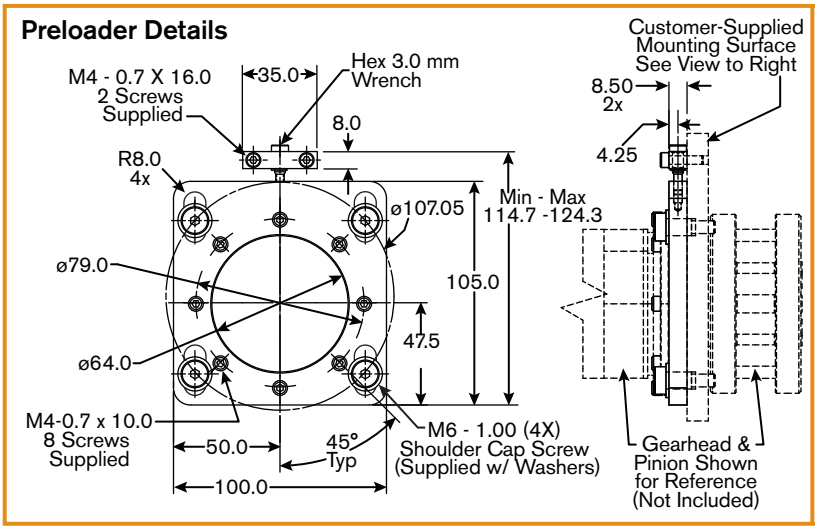

Customer Mounting Surface Details

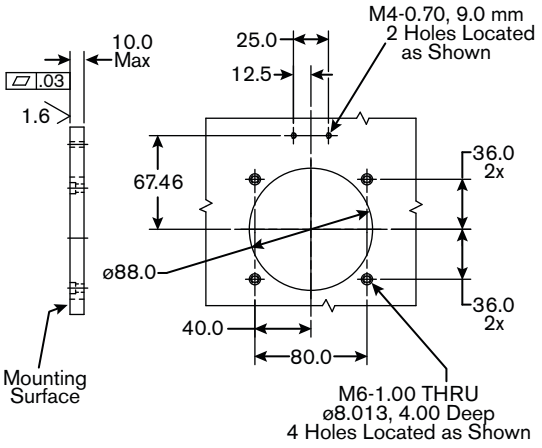

RPS-PRE-ISO-090-3 Product Number 960850

Preloader Details

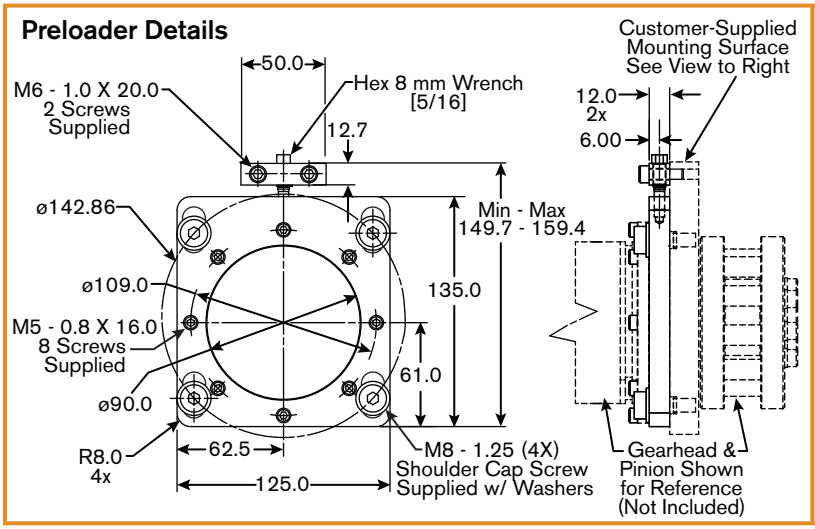

Customer Mounting Surface Details

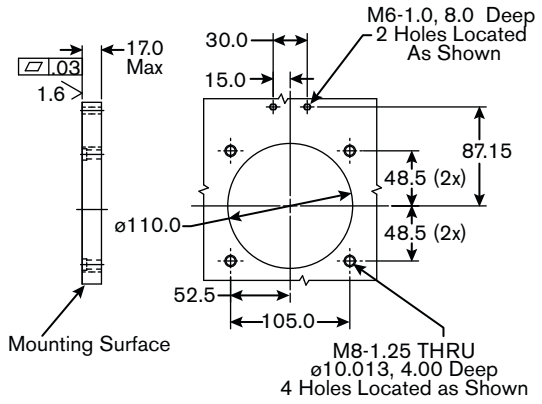

RPS-PRE-ISO-110-3 Product Number 960852

Preloader Details

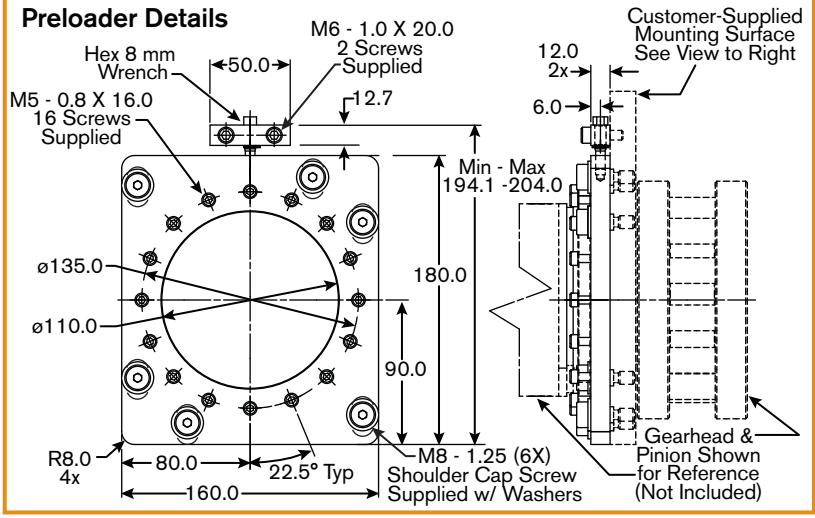

Customer Mounting Surface Details

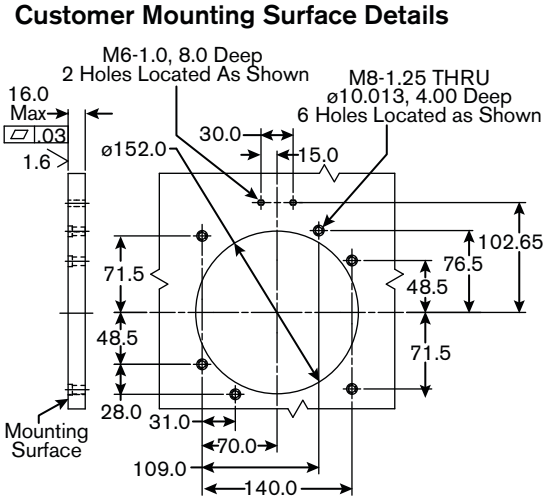

Preloader Dimensions

RPS-PRE-ISO-140-3 Product Number 960853

Preloader Details

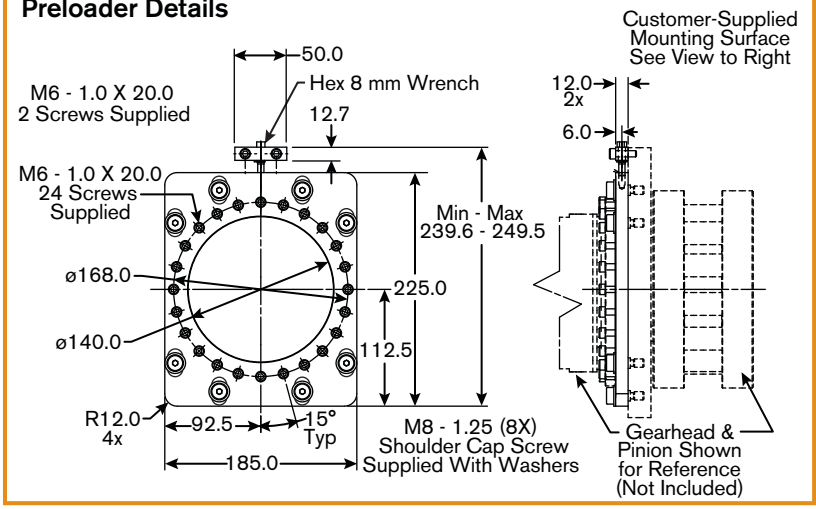

Customer Mounting Surface Details

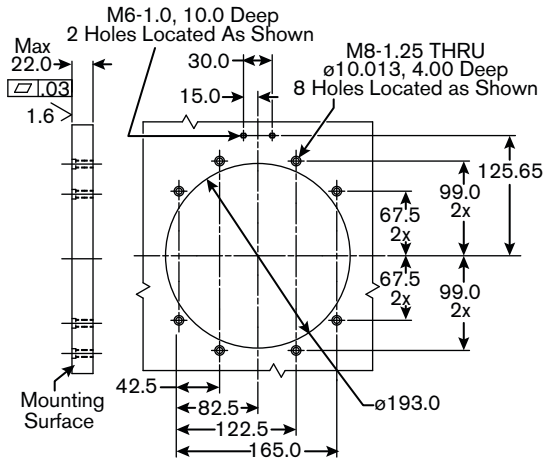

RPS-PRE-ISO-200-3 Product Number 960854

Preloader Details

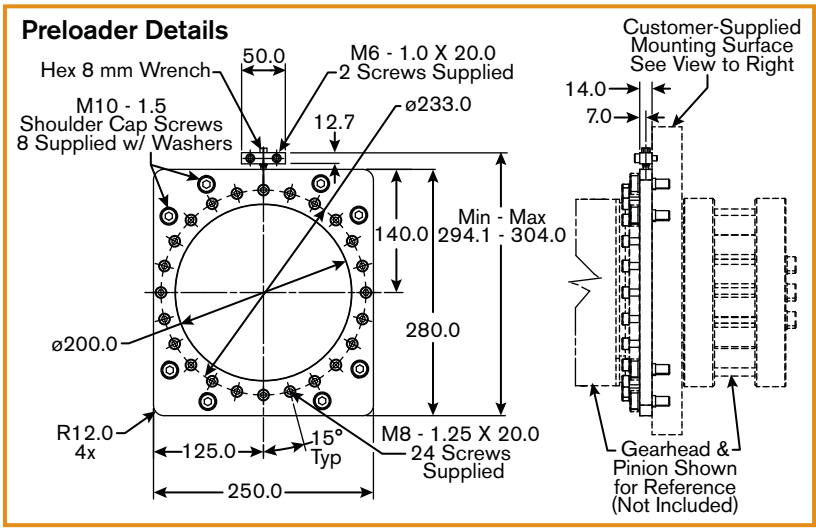

Customer Mounting Surface Details

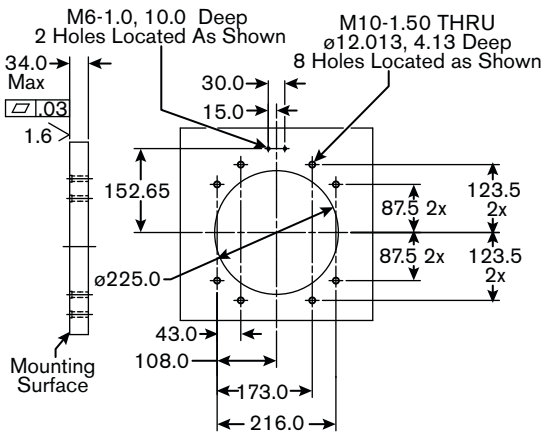

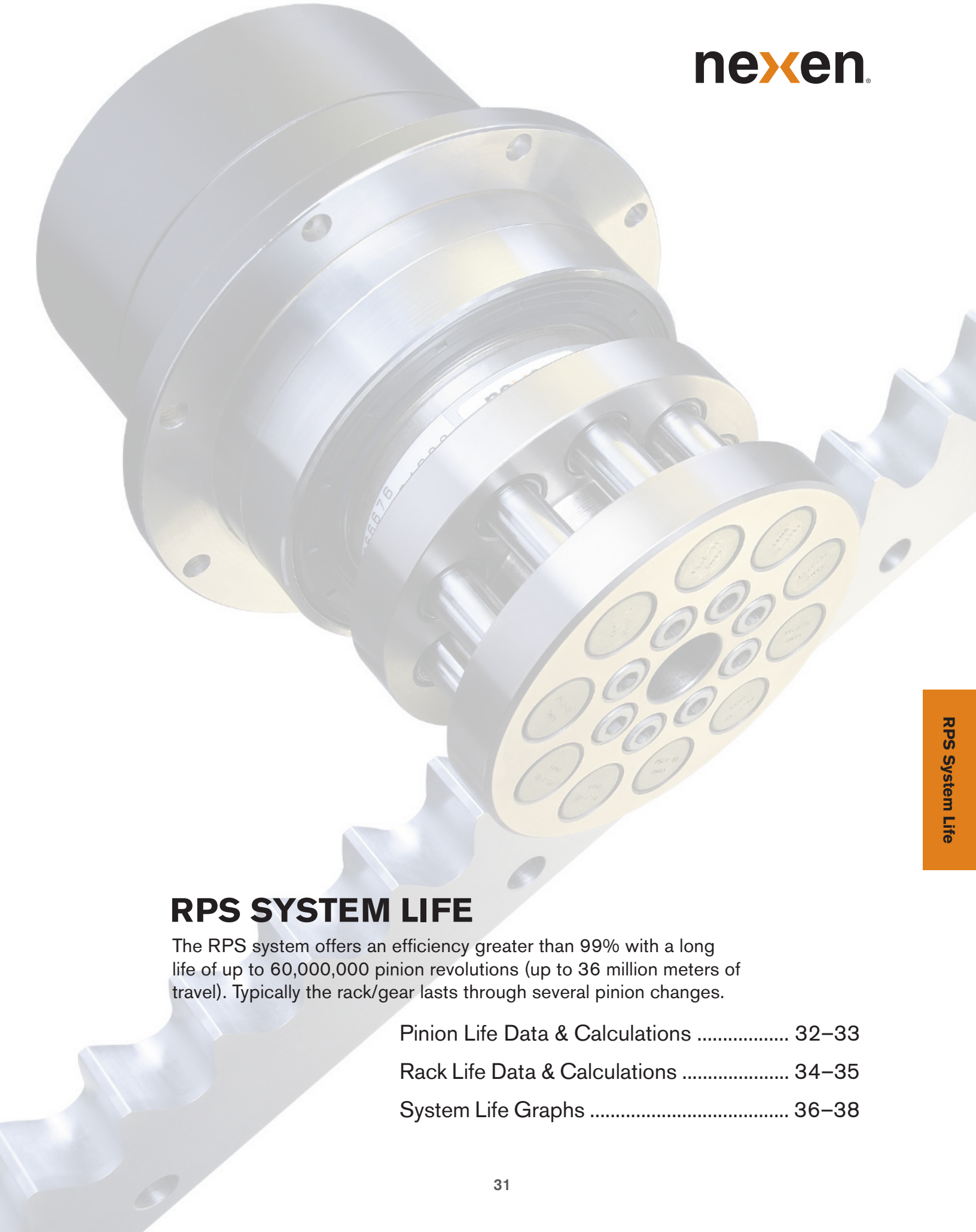

RPS SYSTEM LIFE

The RPS system offers an efficiency greater than 99% with a long life of up to 60,000,000 pinion revolutions (up to 36 million meters of travel). Typically the rack/gear lasts through several pinion changes.

Pinion Life Data & Calculations 32–33

Rack Life Data & Calculations 34–35

System Life Graphs 36–38

Calculating RPS System Life

The calculations in the following section will allow you to calculate the expected rack and pinion life. These calculations will result in the same values as the charts on the following pages.

RPS Pinion Life Data & Calculations

Table 7 RPS Pinion Life Values

		RPS10	RPS12	RPS16		RPS20		RPS25		RPS32	RPS40	RPS4014
				premium	value	premium	value	premium	value			
Max Torque (T_{max})	Nm	4.0	9.5	61.1	12.8	92.3	23.9	159.2	43.8	385.0	458.4	1247.8
Torque at Max Life (T_{final})	Nm	4.0	9.5	33.7	12.8	52.5	23.9	89.5	43.8	218.7	458.4	1247.8
Distance Per Revolution (L_{rev})	meters	0.1	0.12	0.16	0.16	0.2	0.2	0.25	0.25	0.384	0.48	0.56
Transition Point (E_T)	million contacts	60	60	8	2	8.2	2	8.5	2	9.2	60	60
Max Life ($N_{max\ contacts}$)	million contacts	60	60	60	2	60	2	60	2	60	60	60
Constant (C)		NA	NA	115.30	NA	179.43	NA	305.91	NA	747.91	NA	NA

STEP 1: GATHER APPLICATION DATA

Before you begin calculations, there are three key measurements that you will need from your application. Collect the data and record it in space provided to the right.

Measurements Required for Pinion Calculations	Customer Data (record your values below)	*Sample Data*
Average Torque (T_{avg})	Nm	*85 Nm*
Distance Per Cycle (L) (single direction move)	m	*1.3 m*
Average Speed (V_{avg})	m/s	*2 m/s*

STEP 2: CALCULATE THE TOTAL NUMBER OF PINION CONTACTS ($N_{CONTACTS}$)

Perform the following calculations using the data collected from your application data in Step 1.

PINION ROLLER CONTACTS ($N_{contacts}$)

The total number of roller contacts ($N_{contacts}$) that an RPS Pinion can sustain before needing replacement is based on the average torque of your application. Determine which equivalency or inequality statement below is true for the average torque (T_{avg}) of your application. Then complete the corresponding pinion roller contact equation and record your value below.

IF T_{avg} is:	THEN $N_{contacts}$:
$\leq T_{final}$	$= N_{max\ contacts}$
$> T_{final}$ AND $< T_{max}$	$= (C \div T_{avg})^{3.333} =$ (÷ Nm)$^{3.333}$
$= T_{max}$	$= E_T$

PINION LIFE IN ROLLER CONTACTS

$N_{contacts} =$ million contacts

Sample: *(Evaluating RPS20 size)* $N_{contacts} = (179.43 \div 85\ Nm)^{3.333} = 12$ *million contacts*

STEP 3: CONVERT ROLLER CONTACTS TO HOURS, METERS OR REVOLUTIONS

There are two options for converting contacts to other units: exact and estimated. Exact should be used whenever possible. The estimation is available for customers who do not have a well-defined distance per cycle.

EXACT OPTION: PINION LIFE IN HOURS (N_{hours})

Use Table 7 along with the data you collected above to calculate the total number of service hours your pinion can provide before needing replacement. First calculate E_1 to use in the N_{hours} equation.

$E_1 = L \div L_{rev}$
Must round E_1 up to the nearest whole integer.

$E_1 =$ round up (____ m ÷ ____ m) = ____

Sample: $E_1 = 1.3\ m \div 0.2\ m = 6.5\ m \longrightarrow$ *Round up to 7.*

$N_{hours} = (N_{contacts} \bullet 10^6 \bullet L) \div (3600 \bullet E_1 \bullet V_{avg})$

$N_{hours} =$ (____ million contacts $\bullet\ 10^6 \bullet$ ____ m) ÷ (3600 $\bullet$ ____ $\bullet$ ____ m/s)

Pinion Life in Hours

$N_{hours} =$ ____ hrs

Sample: $N_{hours} = (12 \bullet 10^6 \bullet 1.3\ m) \div (3600 \bullet 7 \bullet 2\ m/s) = 309.5\ hrs$

ESTIMATION OPTIONS: PINION LIFE IN METERS & LIFE IN REVOLUTIONS

These calculations assume the pinion travels nonstop in one direction throughout its whole life.

Pinion Life in Meters

PINION LIFE IN METERS (N_{meters})
$N_{meters} = N_{contacts} \bullet L_{rev} \bullet 10^6$

$N_{meters} =$ ____ $\bullet$ ____ m $\bullet 10^6$

$N_{meters} =$ ____ m

Sample: $N_{meters} = 12 \bullet 0.2\ m \bullet 10^6 = 2{,}400{,}000\ m$

Pinion Life in Revolutions

PINION LIFE IN REVOLUTIONS (N_{rev})
$N_{rev} = N_{contacts}$

$N_{rev} =$ ____ million revolutions

Sample: $N_{rev} = 12$ *million revolutions*

Table 8 RPS Rack Life Values

	RPS Rack Size	RPS10	RPS12	RPS16	RPS20	RPS25	RPS32	RPS40	RPS4014
	Pitch (P) meters	0.01	0.012	0.016	0.02	0.025	0.032	0.04	0.04
	Distance Per Revolution (L_{rev}) meters	0.1	0.12	0.16	0.2	0.25	0.384	0.48	0.56
Premium & Standard	Max Dynamic Thrust (F_{max}) N	250	500	2400	2900	4000	6300	6000	14000
	Thrust at Max Life (F_{final}) N	250	500	1000	1500	2200	3600	6000	14000
	Transition Point (E_T) million contacts	30	30	5	5	5	5	30	30
	Max Life ($N_{max\ contacts}$)	30 Million Contacts							
	Slope (m)	NA	NA	-56	-56	-72	-108	NA	NA
	Intercept (b) N	NA	NA	2680	3180	4360	6840	NA	NA
Endurance	Max Dynamic Thrust (F_{max}) N	NA	NA	1500	2250	3300	5 400	6000	14000
	Thrust at Max Life (T_{final}) N	NA	NA	1000	1500	2200	3600	6000	14000
	Transition Point (E_T) million contacts	NA	NA	5	5	5	5	30	30
	Max Life ($N_{max\ contacts}$)	NA	NA	30 Million Contacts					
	Slope (m)	NA	NA	-20	-30	-44	-72	NA	NA
	Intercept (b) N	NA	NA	1600	2400	3520	5760	NA	NA
Universal & Universal Stainless	Max Dynamic Thrust (F_{max}) N	NA	NA	750	1125	1650	2700	4500	10500
	Thrust at Max Life (F_{final}) N	NA	NA	750	1125	1650	2700	4500	10500
	Max Life ($N_{max\ contacts}$)	NA	NA	5 Million Contacts				2 Million Contacts	
Versa	Max Dynamic Thrust (F_{max}) N	NA	NA	500	750	1100	NA	NA	NA
	Thrust at Max Life (F_{final}) N	NA	NA	500	750	1100	NA	NA	NA
	Max Life ($N_{max\ contacts}$)	NA	NA	2 Million Contacts				NA	

STEP 1: GATHER APPLICATION DATA

Before you begin calculations, there are three key measurements that you will need from your application. Collect the data and record it in space provided below.

Measurements Required for Rack Calculations	Customer Data (record your values below)	*Sample Data*
Average Thrust Force ($\mathbf{F_{avg}}$)	N	*2500 N*
Distance Per Cycle (**L**) (single direction move)	m	*1.3 m*
Average Speed ($\mathbf{V_{avg}}$)	m/s	*2 m/s*

STEP 2: CALCULATE THE TOTAL NUMBER OF TOOTH CONTACTS

Perform the following calculations using the data collected from your application and the values from Table 8.

RACK TOOTH CONTACTS ($N_{contacts}$)

The total number of tooth contacts ($N_{contacts}$) that an RPS Rack can sustain before needing replacement is based on the average thrust force of your application. Use Table 5 to determine which equivalency or inequality statement below is true for the average thrust force ($\mathbf{F_{avg}}$) of your application. Then complete the corresponding rack tooth contact formula and record your value below.

IF $\mathbf{F_{avg}}$ is:	THEN $\mathbf{N_{contacts}}$:
$\leq \mathbf{F_{final}}$	$= \mathbf{N_{max\ contacts}}$
$> \mathbf{F_{final}}$ AND $< \mathbf{F_{max}}$	$= (\mathbf{F_{avg}} - \mathbf{b}) \div \mathbf{m} =$ (N − N) ÷
$= \mathbf{F_{max}}$	$= \mathbf{E_T}$

RACK LIFE IN TOOTH CONTACTS

$\mathbf{N_{contacts}} =$ million contacts

Sample: *(Evaluating RPS20 size)* $\mathbf{N}_{contacts} = (2500\ N - 3180) \div -56 = 12$ *million contacts*

STEP 3: CONVERT RACK TOOTH CONTACTS TO HOURS OF LIFE

Perform the following calculations using the data collected from your application and the values from Table 5.

RACK LIFE IN HOURS (N_{hours})

Use Table 5 along with the data you collected above to calculate the total number of service hours your rack can sustain before needing replacement.

$\mathbf{N_{hours}} = (\mathbf{N_{contacts}} \div 3600) \bullet (\mathbf{L} \div \mathbf{V_{avg}}) \bullet 10^6$

$\mathbf{N_{hours}} =$ (÷ 3600) • (m ÷ m/s) • 10^6

RACK LIFE IN HOURS

$\mathbf{N_{hours}} =$ hours

Sample: $\mathbf{N_{hours}} = (12 \div 3600) \bullet (1.3\ m \div 2\ m/s) \bullet 10^6 = 2166$ *hours*

RPS System Life Graphs (RPS10, 12 & 16)

The RPS system life ratings are based on the force of the load. Refer to the following graphs to determine the pinion and rack life based on your application load forces. Graphs show the thrust along side the corresponding torque to more easily calculate your complete system life. Typically the pinion can be replaced numerous times before replacing the rack.

RPS10 System Life Graph

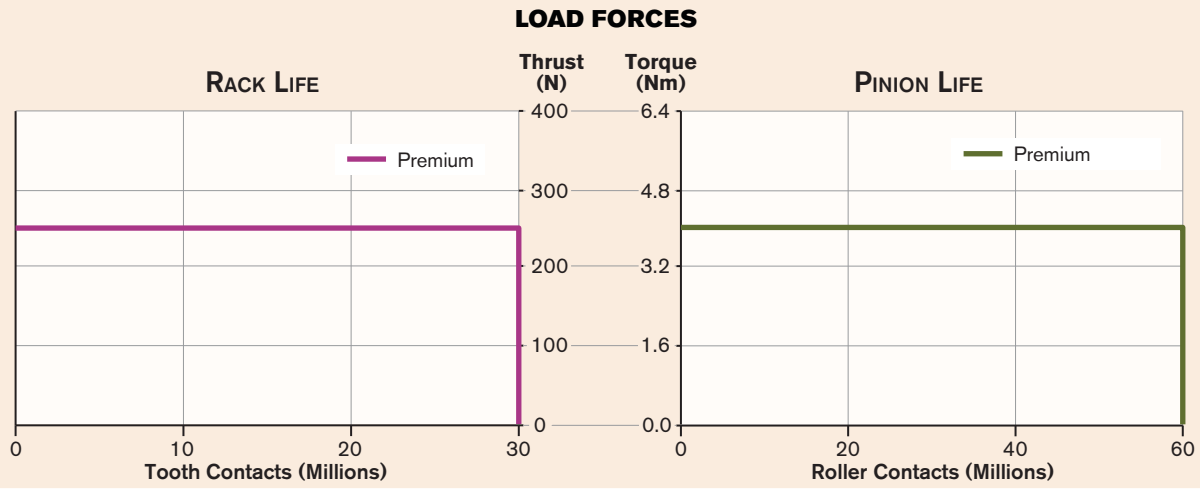

RPS12 System Life Graph

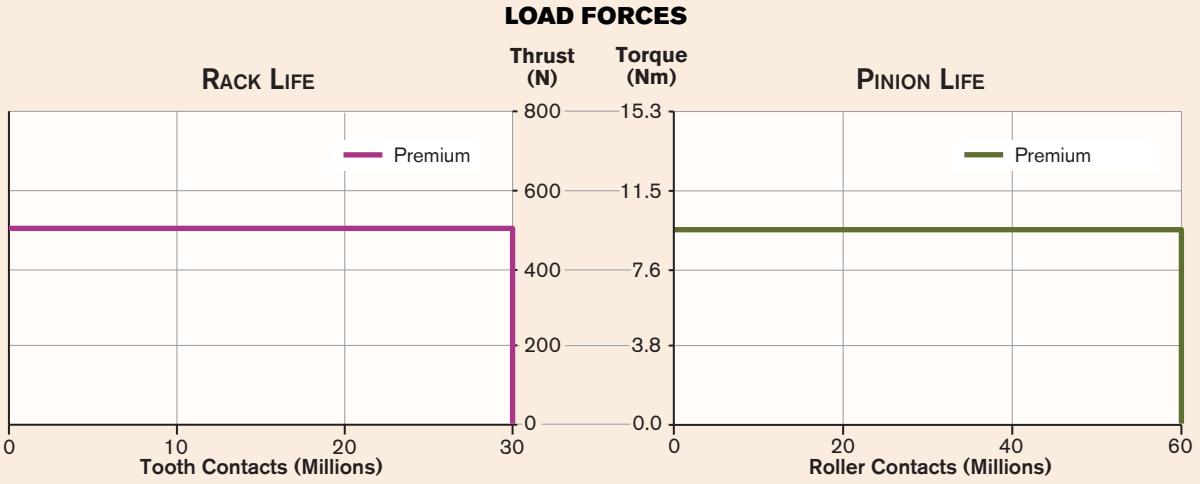

RPS16 System Life Graph

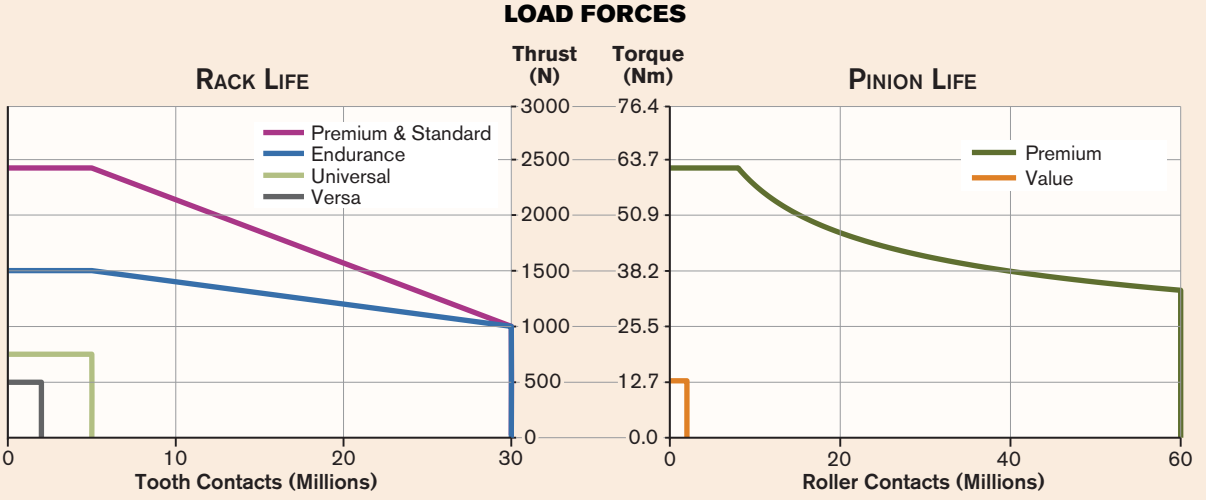

RPS System Life Graphs (RPS20, 25 & 32)

RPS20 System Life Graph

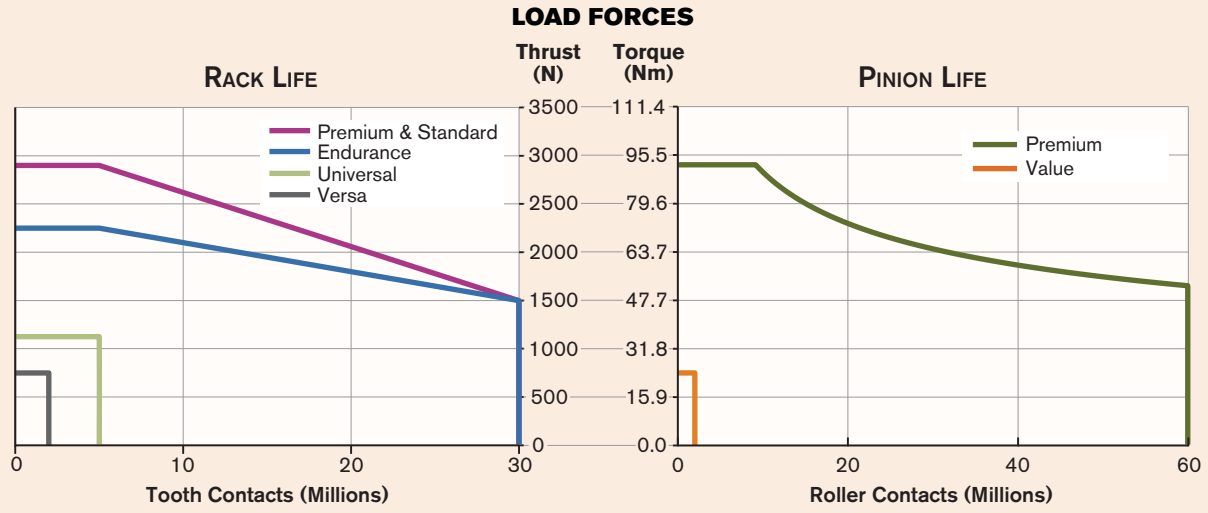

RPS25 System Life Graph

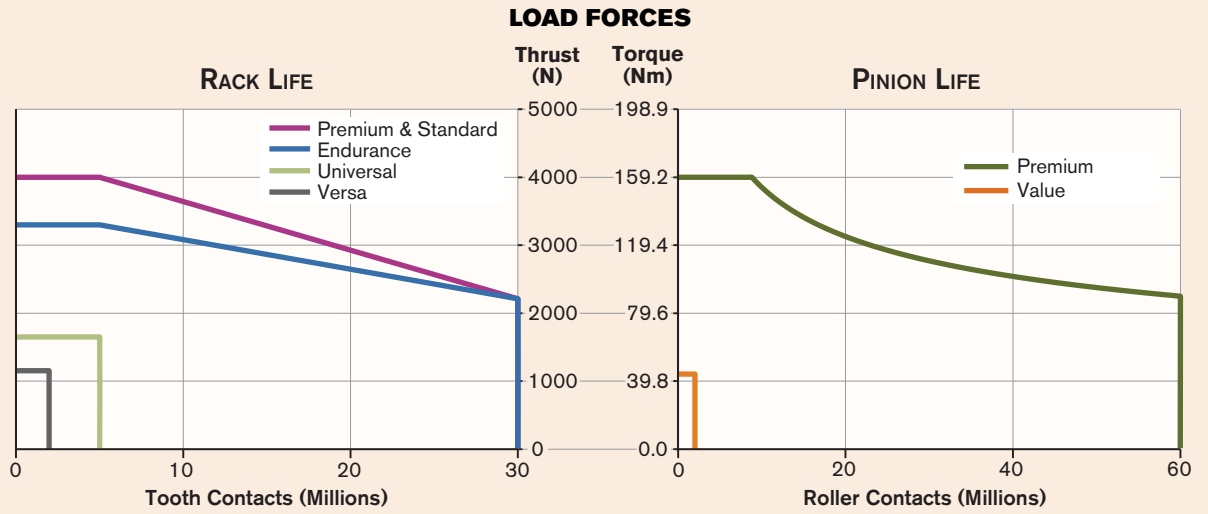

RPS32 System Life Graph

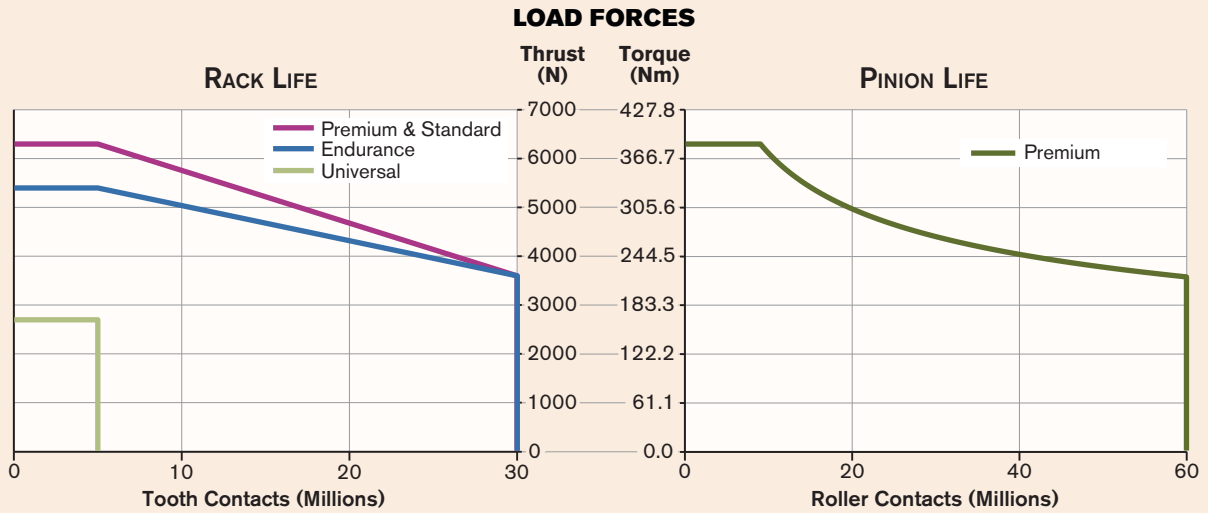

RPS40 System Life Graph

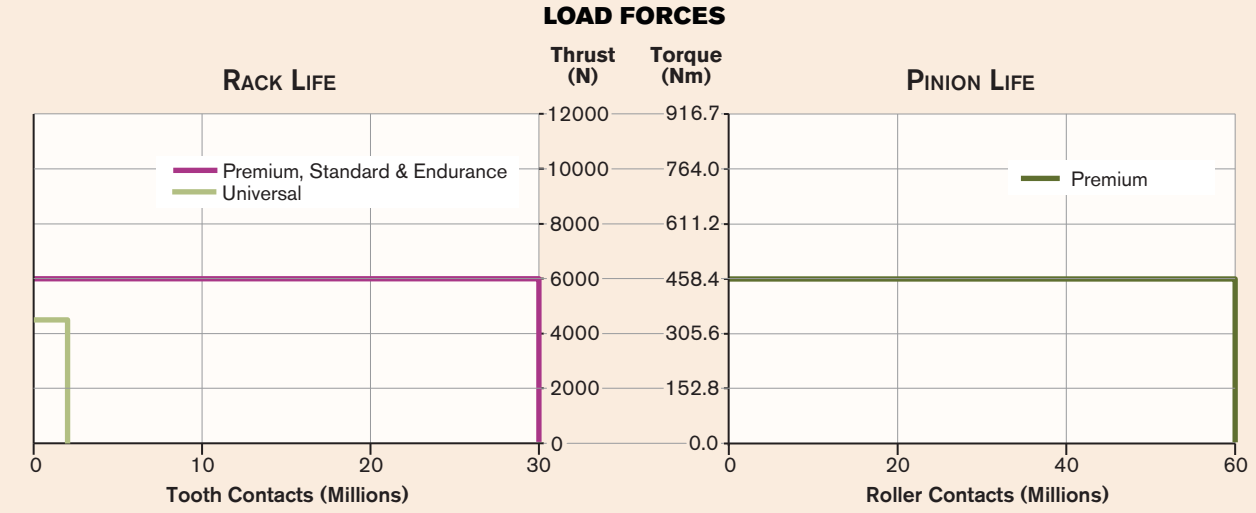

RPS4014 System Life Graph

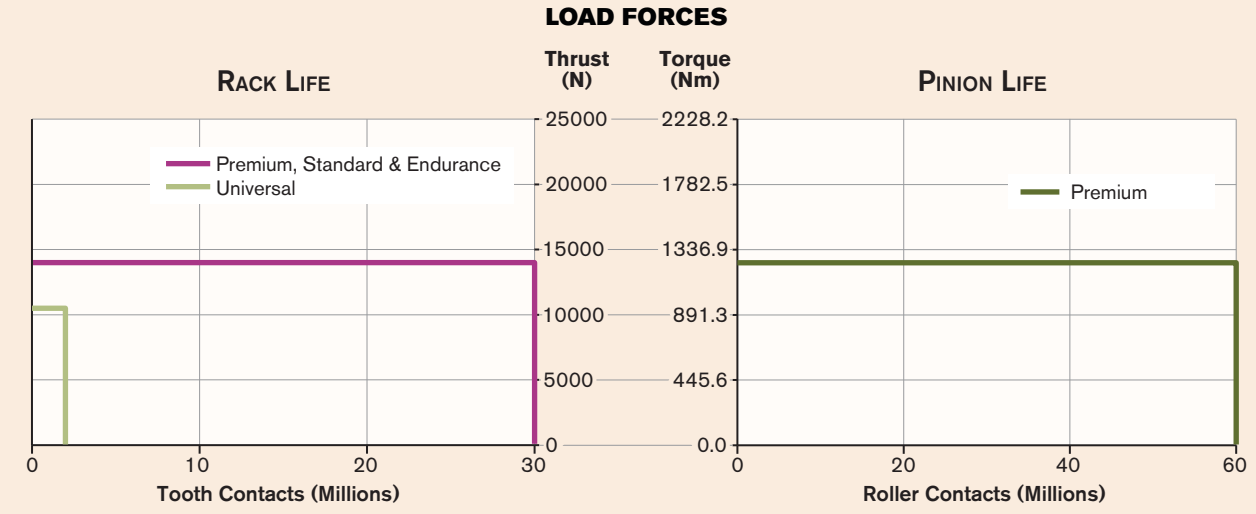

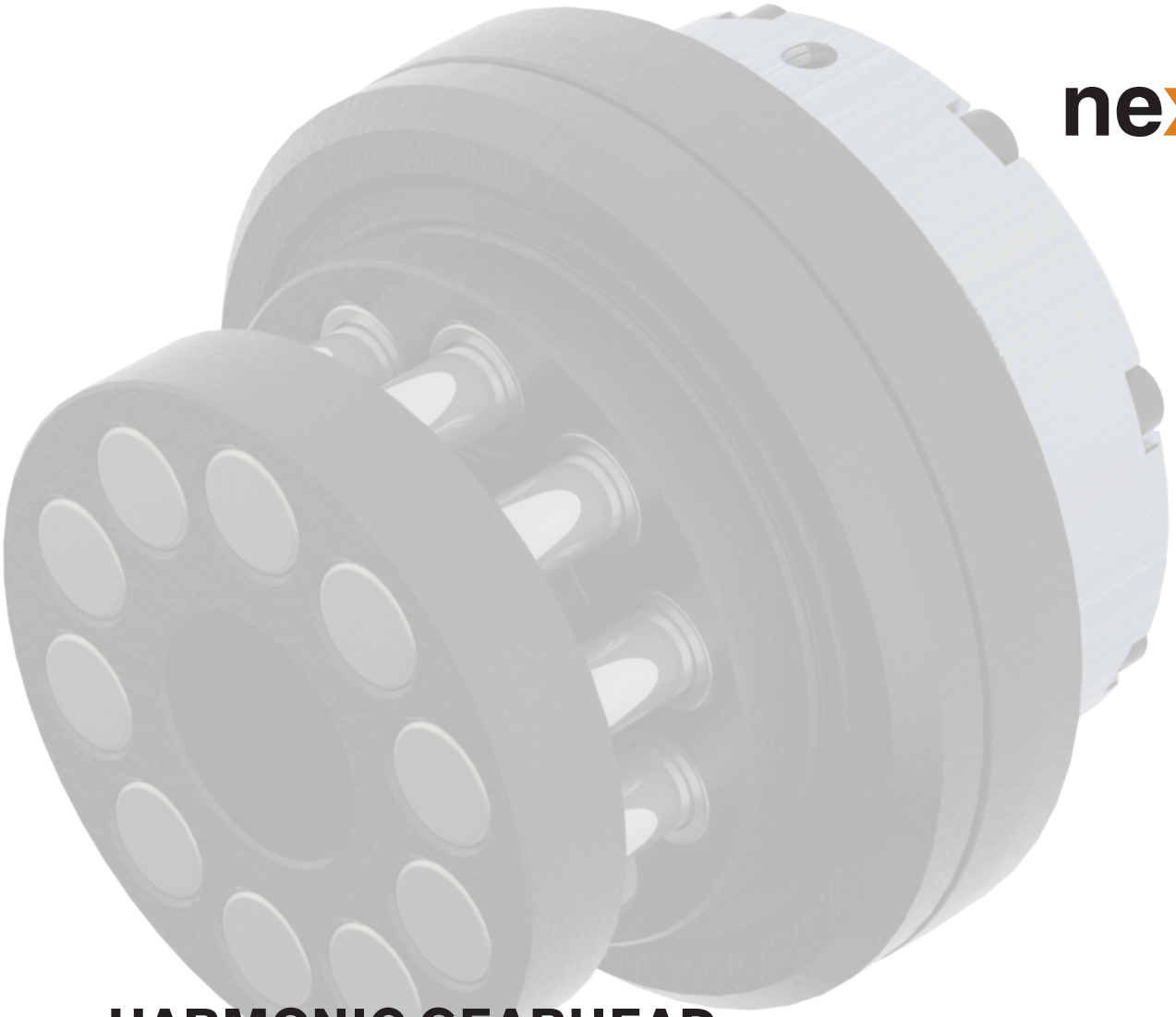

HARMONIC GEARHEAD

Nexen's revolutionary Harmonic Gearhead (HG) is the perfect combination of size and precision. Use the Harmonic Gearhead integrated with Nexen's RPS Pinion (HGP) to create a true backlash-free solution from the motor to the driven load. With up to a 70% reduction in length over standard gearheads, machine designers will appreciate the opportunities available with this space saving product.

Features & Benefits 40

Specifications 41

Selection Process
- Cycle Determination 42
- Stiffness 43
- Output Loading 44–45
- Efficiency 46

Dimensional Drawings 47

Life Graphs 48

Input Motor 48

HGP Preloader 49–50

PATENTED

The Nexen Harmonic Gearhead Advantage

Nexen's patent pending Harmonic Gearhead (HG) offers a precision drive solution that overcomes the challenges of existing gearing methods. This new technology eliminates problems with backlash that have plagued the motion control industry, offering reliable precision even when intricate movements are required.

In the tradition of Nexen's entire line of precision motion control products, the Harmonic Gearhead sets new standards with these great features:

- **Zero Backlash**
- **High Positional Accuracy & Repeatability**
- **Quiet Operation**
- **Large, Rugged Cross-Roller Output Bearing**
- **Compact**

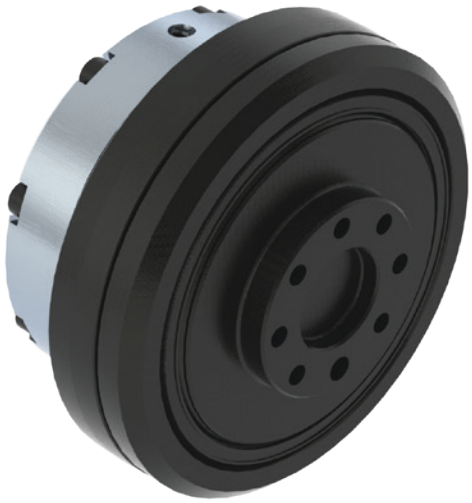

Save 70% or more in gearhead length.

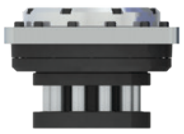

HGP

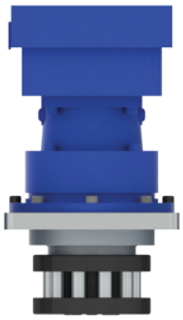

Standard Two-Stage Planetary

Harmonic Gearhead with Pinion

Save space by taking advantage of Nexen's Harmonic Gearhead with Pinion (HGP).

In this model, the RPS pinion comes fully integrated into the gearhead, creating the only drive solution that maintains **zero backlash** from the driving motor shaft through to the driven load for both linear and rotary motion.

DRIVING TECHNOLOGY IN ADVANCING MARKETS

Nexen's HG(P) utilizes Harmonic Strain-Wave Technology made up of a circular spline, flex-spline and wave generator. As these components rotate, their unique shape and tooth profile allow 30% of the teeth to be engaged simultaneously for:

Smooth Rotation • High Torque • Zero Backlash

The effortless, low-stress meshing of the circular spline and flex-spline teeth results in a long gearhead life with reliable, quiet operation. Some operators call this peace of mind.

Aerospace

Robotics

Semiconductor

Factory Automation

Medical / Surgical

Harmonic Gearhead Specifications

HARMONIC GEARHEAD (HG)

Specifications		HG17				HG25				HG32				HG50		
Gear Ratio		50:1	80:1	100:1	120:1	50:1	80:1	100:1	120:1	50:1	80:1	100:1	120:1	80:1	100:1	120:1
Max Acceleration Torque[1]	Nm	35	35	51	51	72	113	140	140	140	217	281	281	675	866	1057
Max Average Torque[1]	Nm	25	30	35	35	51	85	90	90	100	153	178	178	484	611	688
Inertia at Input	kg-cm^2	0.1959	0.1954	0.1952	0.1952	0.7522	0.7503	0.7498	0.7496	2.6294	2.6236	2.6222	2.6215	20.485	20.467	20.457
Backlash	ArcSec	0				0				0				0		
One Way Accuracy	±ArcSec	45				45				45				45		
One Way Repeatability	±ArcSec	10				10				10				10		
Weight	kg	1.4				2.6				5.2				20.0		
Product Number		969000	969001	969002	969003	969040	969041	969042	969043	969060	969061	969062	969063	969100	969101	969102

HARMONIC GEARHEAD WITH PINION (HGP)

Specifications		HGP17				HGP25				HGP32				HGP50		
Integrated Pinion Size		RPS16				RPS20				RPS25				RPS40		
Gear Ratio		50:1	80:1	100:1	120:1	50:1	80:1	100:1	120:1	50:1	80:1	100:1	120:1	80:1	100:1	120:1
Max Acceleration[1]	Torque (Nm)	35	35	51	51	72	92	92	92	140	159	159	159	458		
	Thrust (N)	1374	1374	2003	2003	2262	2900	2900	2900	3519	4000	4000	4000	6000		
Max Average[1]	Torque (Nm)	25	30	35	35	51	85	90	90	100	153	159	159	458		
	Thrust (N)	982	1178	1374	1374	1602	2670	2827	2827	2513	3845	4000	4000	6000		
Inertia at Input	kg-cm^2	0.1971	0.1958	0.1955	0.1954	0.7538	0.7509	0.7502	0.7499	2.6326	2.6248	2.6230	2.6221	20.518	20.488	20.471
Backlash	µm	0				0				0				0		
One Way Accuracy	± µm	25				25				25				25		
One Way Repeatability	± µm	7.5				7.5				7.5				7.5		
Weight	kg	1.7				3.0				5.8				24.8		
Product Number		969010	969011	969012	969013	969050	969051	969052	969053	969070	969071	969072	969073	969110	969111	969112

GENERAL SPECIFICATIONS FOR BOTH HG & HGP UNITS

Specifications		Size 17	Size 25	Size 32	Size 50
Max Input Speed[1]	cyclic RPM	7300	5600	4800	3500
	continuous RPM	3650	3500	3500	2500
Max Average Input Speed[1]	RPM	3650	3500	3500	2500
Max Input Acceleration Rate	rad/sec^2	5100	3900	3350	2450
Efficiency @ Max Average Torque (E_{T_max})		80% ±5%			
Stiffness, Hysteresis		See ***Stiffness*** Section			
Output Loading		See ***Output Loading*** Section			
Temperature Limits		Ambient Temperature: 0°C to +40°C Maximum Unit Temperature: < 90°C			
Mounting Position		No Restriction			
Direction of Rotation		Motor Opposite Gearhead			
Lubrication		Lubricated for Life			
Life		See ***HG & HGP Life*** Section			

[1] Refer to the ***Harmonic Gearhead Selection Process*** section for product sizing procedures.
Note: All accuracy data taken at 2% of maximum load.

Harmonic Gearhead Selection Process

When selecting the proper Harmonic Gearhead, use the Specifications table to determine the HG/HGP size that best fits the application's torque, speed and physical size requirements. Then, use the following calculation sections to evaluate whether the cycle type, stiffness, efficiency and bearing load capacity of the selected HG/HGP size meets all the application requirements.

HG/HGP Cycle Determination

Correct sizing of the Harmonic Gearhead is critical to the proper function and life expectancy of your unit. The following section provides information regarding cycle type to be used in the gearhead sizing process. The two Cycle Types are: **Continuous Motion & Cyclic Motion**

STEP 1: Determine which Cycle Type applies to your application.

STEP 2: Use the *Cycle Limitations* information to correctly size the Gearhead.

CONTINUOUS MOTION: single direction motion lasting longer than one hour

Cycle Limitations	
Input Speed	Max average input speed
Output Torque	Max average torque

Example Cycle

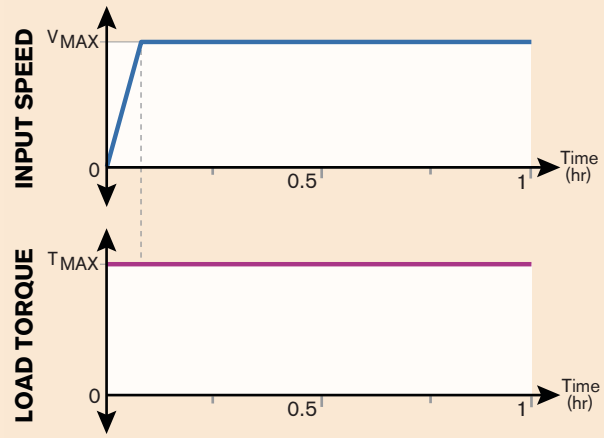

CYCLIC MOTION: reversing direction motion

Cycle Limitations	
Input Speed	Time at Max Input Speed ≤10 seconds (t_2)
	Time above Max Average Input Speed ≤30 seconds (t_1)
	Average over any 2 minutes ≤ Max Average Input Speed
Output Torque	Time at Max Acceleration Torque ≤10 seconds (t_3)
	Time above Max Average Torque ≤10 seconds
	Average over any 2 minutes ≤ Max Average Torque

Example Cycle

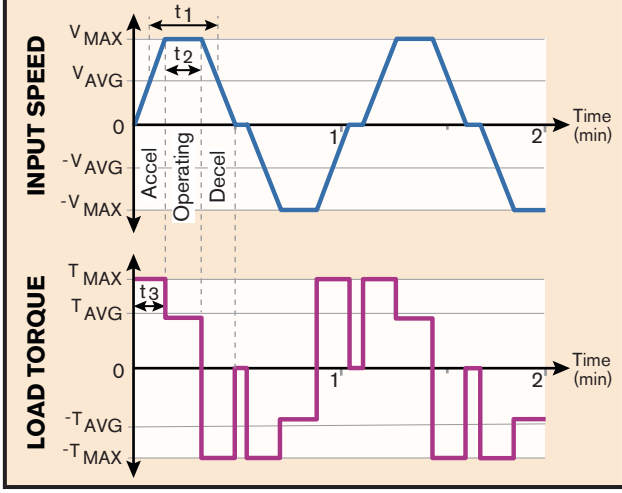

HG/HGP Torsional Stiffness

Unlike many other gearing types, Harmonic Gearhead stiffness is non-linear. As torque increases, stiffness also increases, as shown in the graph below. NOTE: If you wish to calculate "windup" at torque greater than T1, remember to include the displacement caused by lower stiffness regions.

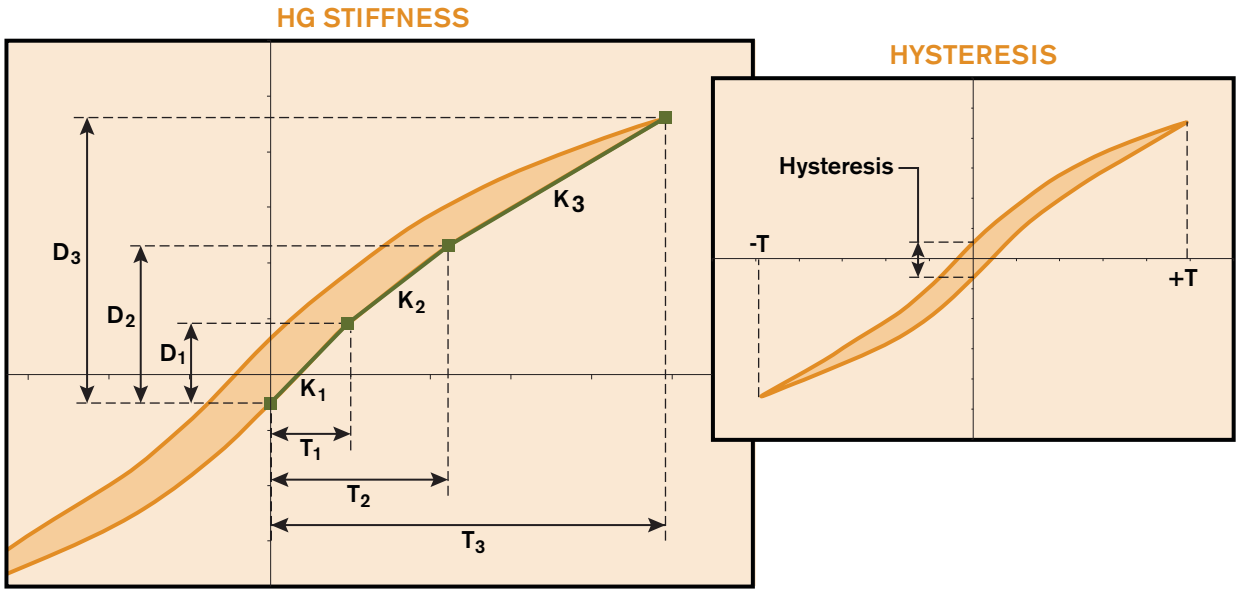

HG AND HGP STIFFNESS DATA

Torsional stiffness is determined by applying a torque to the output of the gearhead while the input is held from rotation. For ease of calculation, the slope of the curve is approximated using three straight lines representing stiffness values K_1, K_2, & K_3.

Refer to the tables below for the typical stiffness values for each size HG and HGP.

	Reference Torque (Nm)		Ref. Disp. (ArcMin)			Stiffness (Nm/ArcMin)		
				50:1	80:1 +		50:1	80:1 +
Size 17	T_1	3.9	D_1	1.66	1.44	K_1	2.36	2.70
	T_2	8.0	D_2	2.94	2.81	K_2	3.20	3.00
	T_3	35.0	D_3	10.08	10.99	K_3	3.78	3.30
Size 25	T_1	14.0	D_1	2.00	2.12	K_1	7.00	6.60
	T_2	48.0	D_2	6.53	6.98	K_2	7.50	7.00
	T_3	90	D_3	11.20	11.98	K_3	9.00	8.40

	Reference Torque (Nm)		Ref. Disp. (ArcMin)			Stiffness (Nm/ArcMin)		
				50:1	80:1 +		50:1	80:1 +
Size 32	T_1	52.0	D_1	3.11	2.81	K_1	16.70	18.50
	T_2	108.0	D_2	6.06	4.81	K_2	19.00	28.00
	T_3	178.0	D_3	8.52	6.93	K_3	28.50	33.00
Size 50	T_1	108.0	D_1		1.66	K_1		65.00
	T_2	382.0	D_2	NA	5.81	K_2	NA	66.00
	T_3	688.0	D_3		10.38	K_3		67.00

HYSTERESIS

Hysteresis is measured by applying maximum average torque in both directions on the output with the input locked. Typical values are provided in the table to the right.

Hysteresis (ArcSec)			
Size 17	Size 25	Size 32	Size 50
90	90	60	60

HG Output Loading

Harmonic Gearheads come equipped with a cross roller bearing on the output, offering high precision and large, load-carrying capabilities. Use the following information to verify that the selected gearhead meets all application load requirements.

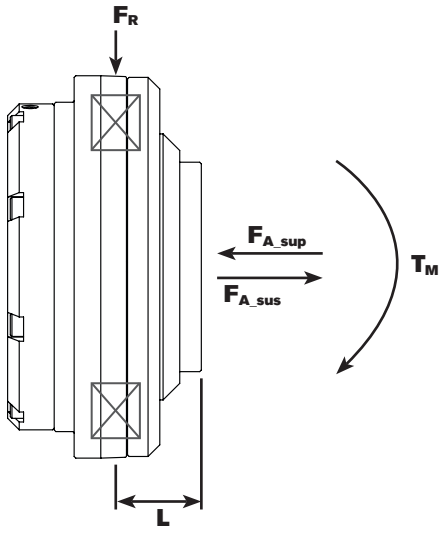

Table 9

Harmonic Gearhead Output Load Ratings Table					
		HG(P)17	HG(P)25	HG(P)32	HG(P)50
Bearing Constant (C_B)	m^{-1}	31.25	23.81	18.52	11.90
Bearing Center Distance to Flange (L)	m	0.0185	0.0255	0.029	0.0425
Max Axial Suspended Load ($F_{A_sus_max}$)	N	450	1100	1550	4500
Max Axial Supported Load ($F_{A_sup_max}$)	N	10100	11700	19000	45400
Max Radial Load (F_{R_max})	N	2220	3180	4220	12200
Max Moment Load (T_{M_max})	Nm	170	270	450	1590
Max Combined Load (P_{C_max})	N	6800	7900	12800	30450

Single vs. Multiple Load Direction

Single Loading Direction

If only one loading direction applies to your application, simply compare the maximum application load with the HG ratings above to ensure that the gearhead is capable of withstanding the application load.

Multiple Loading directions

When two or more loading directions apply, calculate the combined load using radial, axial and moment load values. Record your application data and perform the calculations on the following page to determine the Combined Load (P_C) of your application. Then compare this value with the Max Combined Load in Table 9 above.

NOTE: Although Combined Load is calculated using average loads, no load should exceed the maximum rated load for that loading direction.

CALCULATING COMBINED LOAD REQUIREMENTS

Refer to the explainations and data on the preceding page to complete the following calculations to determine the combined load requirements of your application.

STEP 1: GATHER APPLICATION DATA

Axial (F_A), Radial (F_R), and Moment (T_M) Loads are application specific. Use the table below to record the average loads that the gearhead will be subjected to during operation.

Application Loads Required for Gearhead Selection	Customer Application Data (record your values below)	*Sample Data (HG25)*	*Sample Application*
Average Axial Load (F_A) [Either suspended (F_{A_sus}) or supported (F_{A_sup}), whichever is present in your application]	N	*1000 N (F_{A_sup})*	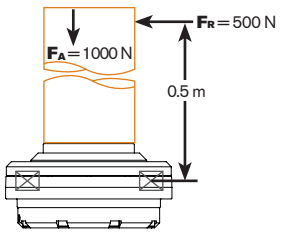
Average Radial Load (F_R)	N	*500 N*	
Average Moment Load (T_M)	Nm	*250 Nm*	

STEP 2: CALCULATE COMBINED LOAD ON BEARING

Calculating a Combined Load simplifies a complex load scenario into a single value that characterizes the application and can be compared to the Maximum Combined Load (P_{C_max}) in the ratings table. Follow the steps below to find the Combined Load that characterizes your application.

Radial/Moment Load (F_{RM}):
$F_{RM} = F_R + (C_B \cdot T_M)$

F_{RM} = _____ N + (_____ m^{-1} • _____ Nm)

Sample: F_{RM} = *500 N + (23.81 m^{-1} • 250 Nm) = 6452.5 N*

Radial/Moment Load (F_{RM})

F_{RM} = _____ N

*Use this table to determine the correct value for X & Y to be used in the **Combined Load** equation below.*

$\frac{F_A}{F_{RM}} = \frac{\text{_____ N}}{\text{_____ N}} =$ _____

IF:			THEN: X	THEN: Y
$\frac{F_A}{F_{RM}}$	≤	1.5	1	0.45
$\frac{F_A}{F_{RM}}$	>	1.5	0.67	0.67

Sample: *1000 N ÷ 6452.5 N = 0.155 So, X = 1 & Y = 0.45*

Combined Load (P_C):
$P_C = (X \cdot F_{RM}) + (Y \cdot F_A)$

P_C = (_____ • _____ N) + (_____ • _____ N)

Sample: P_C = *(1 • 6452.5 N) + (0.45 • 1000 N) = 6902.5 N*

Combined Load (P_C)

P_C = _____ N

STEP 3: VERIFY APPROPRIATE HG SIZE

Compare the calculated Combined Load (P_C) value with the Max Combined Load (P_{C_max}) found in Table 9 to verify whether the selected HG size meets your application load requirements.
NOTE: Consult Nexen if application subjects the HG output to significant vibrations or impact loading.

Gearhead efficiency is dependent on many factors, including temperature, speed, torque, and lubrication type. However, the biggest contributor to efficiency loss is running torque, therefore the following calculations focus on your application torque. As is true with any system, efficiency calculations are merely estimations and should be treated as such.

STEP 1: CALCULATE THE TORQUE RATIO

To find the Torque Ratio, divide your application torque by the maximum average torque.

a. Refer to the HG Specifications Table to find max average torque values.

b. Determine the torque on which you want to base your efficiency ratings.

Application Torque (T_{AP})	Max Torque (T_{max})
Sample: *12 Nm*	***Sample:*** *25 Nm*

Torque Ratio: $R = \frac{T_{AP}}{T_{max}}$ $R = \frac{\quad}{\quad}$ Torque Ratio $R =$

Sample: $R = 12 \div 25 = 0.48$

STEP 2: FIND THE EFFICIENCY COMPENSATION COEFFICIENT (C_E)

Use the graph below to determine the Compensation Coefficient (C_E).

a. Mark on the x-axis the Torque Ratio (R) value calculated in Step One.

b. Draw a vertical line from this point until it intersects the curve.

c. From the intersection point marked on the curve, draw a horizontal line to the y-axis.

d. Record the value at this y-axis intersection point as the Compensation Coefficient (C_E).

EFFICIENCY COMPENSATION COEFFICIENT GRAPH

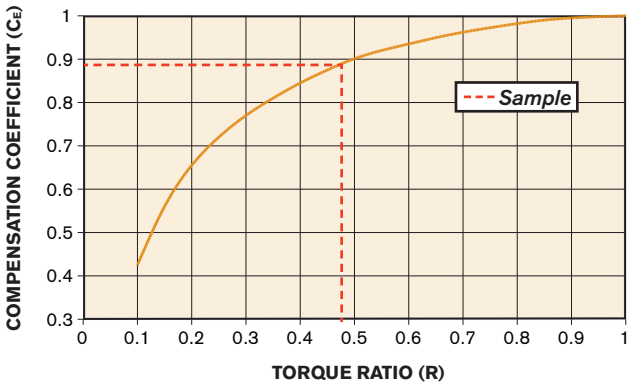

Compensation Coefficient $C_E =$

Sample: $C_E = 0.88$

STEP 3: CALCULATE EXPECTED APPLICATION EFFICIENCY

To find the expected efficiency at your application torque, simply multiply the Efficiency Compensation Coefficient (C_E) by the Efficiency at Max Torque (E_{T_max}).

a. Refer to the HG Specifications table to find the E_{T_max} value and record it in the equation below.

Expected Application Efficiency: $E_A = C_E \cdot E_{T_max}$ $E_A =$ ____ • ____ %

Expected Application Efficiency $E_A =$ ____ %

Sample: $E_A = 0.88 \cdot 80\% = 70.4\%$

SAMPLE INPUT CONFIGURATION

Input can be configured for user servomotor. Contact Nexen.

All dimensions shown in mm.

Motor Dimensions

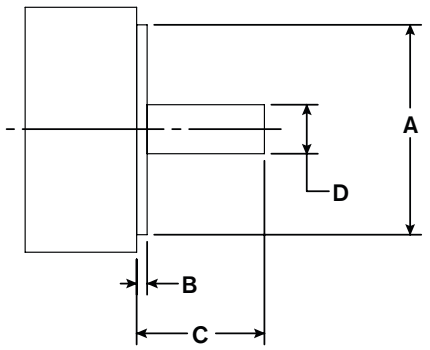

Max Shaft Length

HG & HGP Input

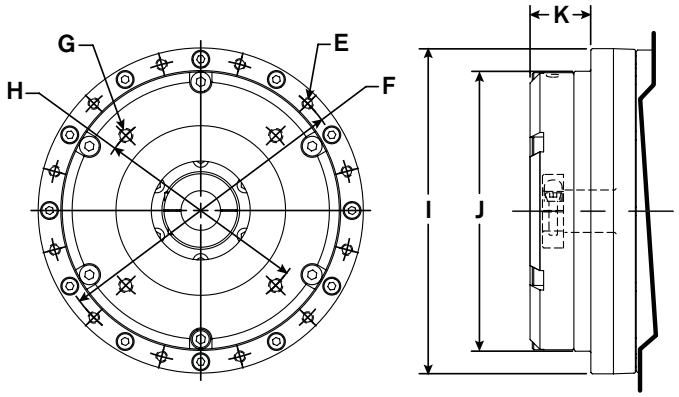

HG/HGP	A	B	C (max)	D	E	F	G	H	I (h7)	J (h7)	K
Size 17	ø40	1.5 – 2.5	31.0	ø9.0	M4 x 0.7 (12 holes)	ø86.0	M4 x 0.7 (4 holes)	ø63.0	ø92.0	ø75.0	24.0
Size 25	ø60	2.0 – 3.0	36.5	ø14.0	M4 x 0.7 (12 holes)	ø107.0	M5 x 0.8 (4 holes)	ø75.0	ø115.0	ø99.0	21.5
Size 32	ø80	2.5 – 3.5	48.0	ø19.0	M5 x 0.8 (12 holes)	ø138.0	M6 x 1.0 (4 holes)	ø100.0	ø148.0	ø125.0	29.0
Size 50	ø130	2.5 – 4.2	64.0	ø32.0	M8 x 1.25 (12 holes)	ø212.0	M10 x 1.5 (4 holes)	ø165.0	ø225.0	ø195.0	41.25

OUTPUT CONFIGURATION

All dimensions shown in mm.

HGP Output

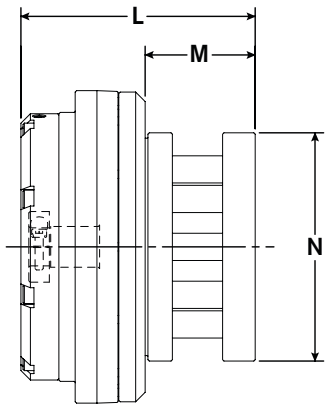

SIZE	L	M	N
HGP17	79.8	34.8	ø67.0
HGP25	87.8	40.5	ø84.0
HGP32	107.0	47.5	ø101.0
HGP50	179.5	86.5	ø190.0

HG Output

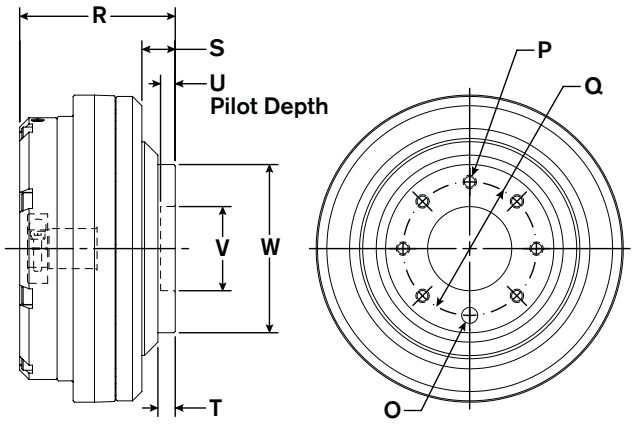

	O (H7)	P	Q	R	S	T	U	V (H7)	W (h8)
HG17	ø5.0 ↧5.0	M5 x .08 7 Holes	ø31.5	52.0	7.0	6.13	4.0	ø20.0	ø40.0
HG25	ø6.0 ↧6.0	M6 x 1.0 7 Holes	ø50.0	60.3	13.0	6.5	6.0	ø31.5	ø63.0
HG32	ø6.0 ↧6.0	M6 x 1.0 11 Holes	ø63.0	74.0	14.5	6.5	6.0	ø40.0	ø80.0
HG50	ø10.0 ↧10.0	M10 x 1.5 11 Holes	ø125.0	108.3	15.3	8.5	8.0	ø80.0	ø160.0

HG & HGP Life

Harmonic Gearhead life is based on average output torque and ratio.

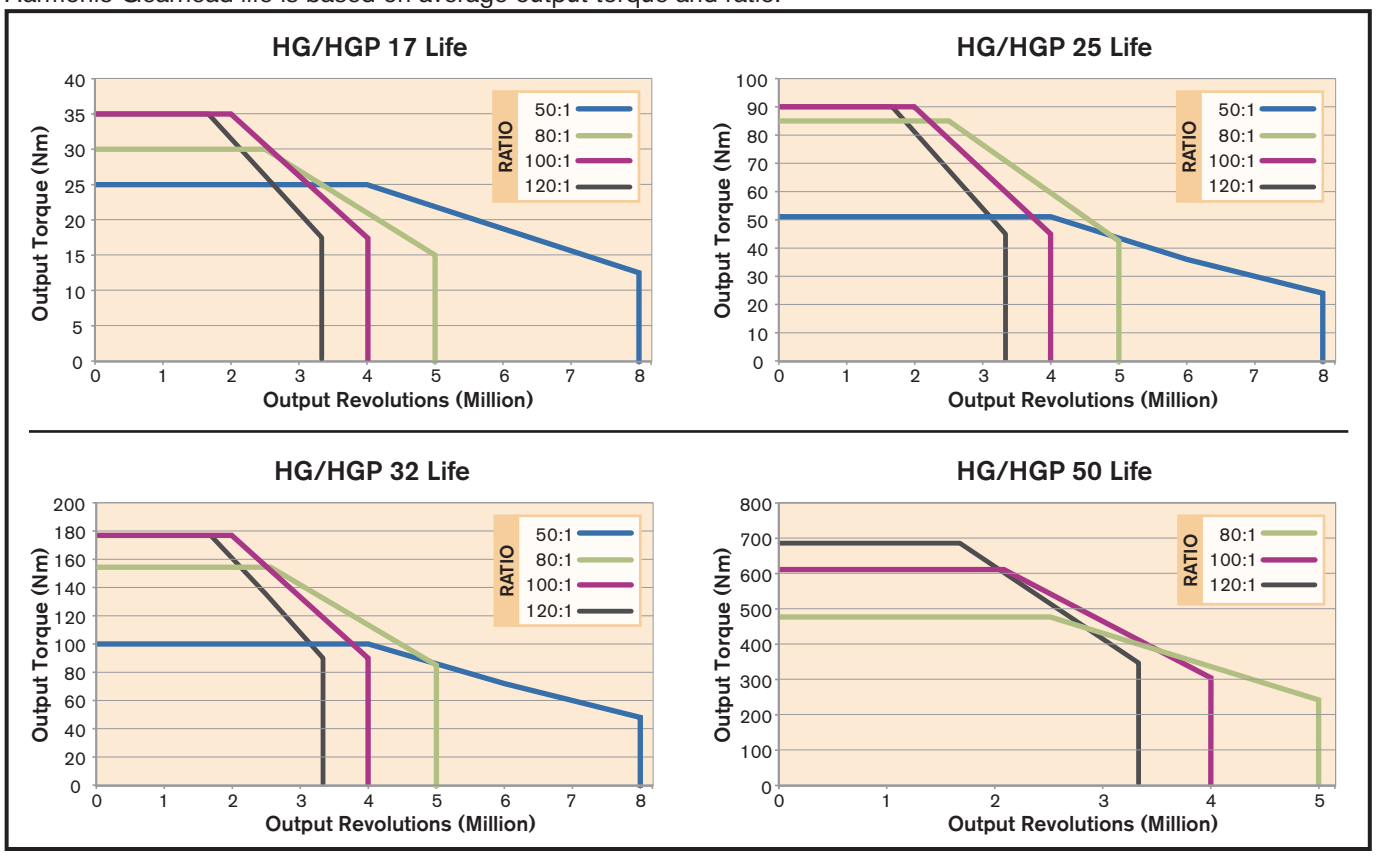

Input Motor Recommendations

Allowable Motor Tilting Torque

Allowable motor tilting torque is defined as the combination of static and dynamic force acting through the motor's center of gravity, multiplied by the distance (d_{CG}) to the HG motor adaptor mounting face.

NOTE: DO NOT subject the input coupling to an overhung load (example: pulley, sheave, etc.).

HG(P) Size	Torque (Nm)
17	20
25	40
32	80
50	200

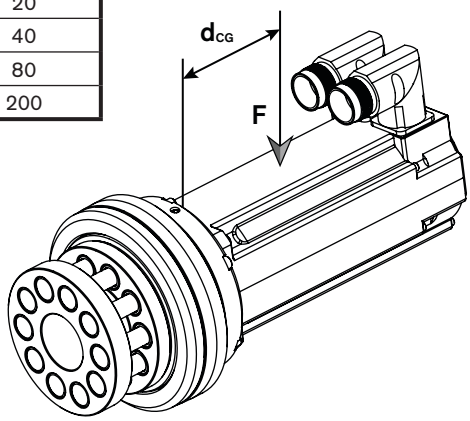

Input Sealing

A gasket seal is positioned between the motor adaptor and the motor pilot to help seal the HG product from external dust and debris. Be sure to use a properly sized servo motor input flange. *A servo motor with an oil seal on the output shaft is recommended.*

NOTE: Consult Nexen in the following situations: a) before using a motor with an interrupted pilot; b) applications in which liquids or excessive dust are present and may ingress into the product.

Heat Dissipation

To dissipate heat generated by the motor, Nexen recommends mounting the gearhead to a machine frame or heat sink. Refer to the table at the right for aluminum heat sink plate sizes used in testing by Nexen.

Heat Sink Surface Area (m^2)			
HG(P)17	HG(P)25	HG(P)32	HG(P)50
0.11	0.14	0.14	0.27

HGP Preloader

Pair Nexen's Harmonic Gearhead with our HG Preloader for easy integration into your machine design. Preloaders feature an adjuster that allows the HGP to be moved up or down into the rack while keeping the pinion properly oriented to the rack.

Preloader components are made of an alloy steel with a corrosion-resistant nickel finish.

- **High-Precision Ground Surfaces**
- **Allows Perpendicular Movement**
- **Corrosion Resistant Materials**

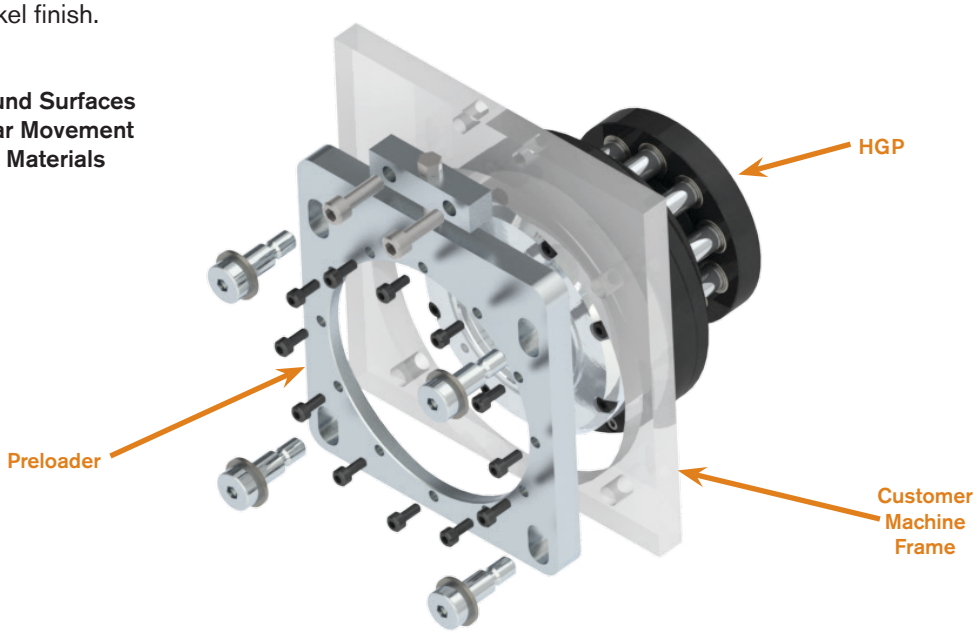

HGP Preloader Dimensional Drawings

HGP17 Product Number 960870

All dimensions shown in mm.

Preloader Details

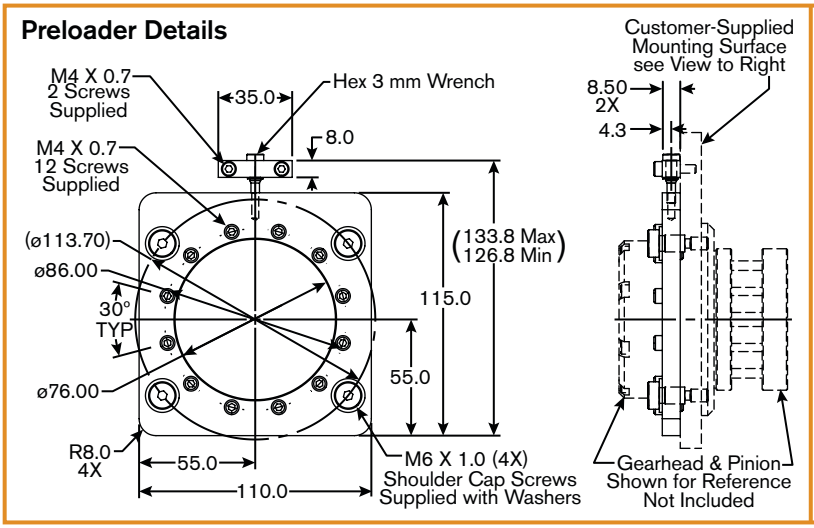

Customer Mounting Surface Details

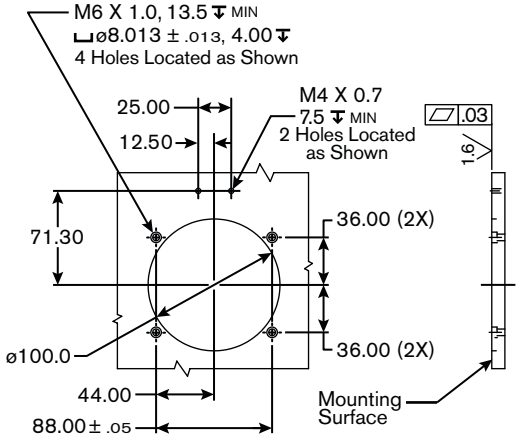

HGP25 Product Number 960872

All dimensions shown in mm.

Preloader Details

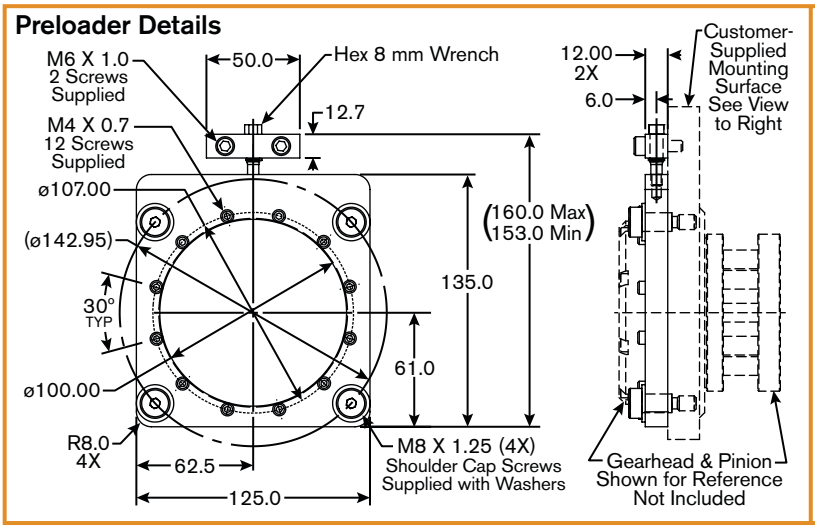

Customer Mounting Surface Details

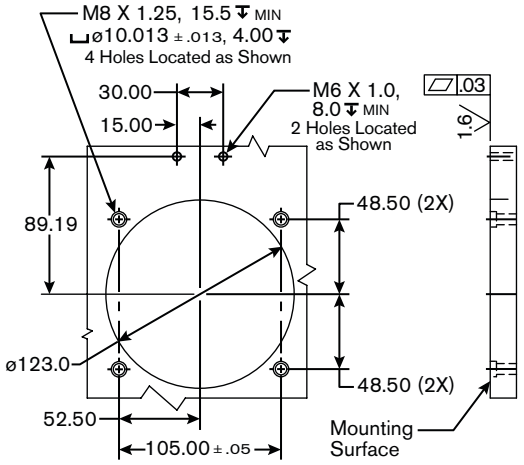

HGP32 Product Number 960873

Preloader Details

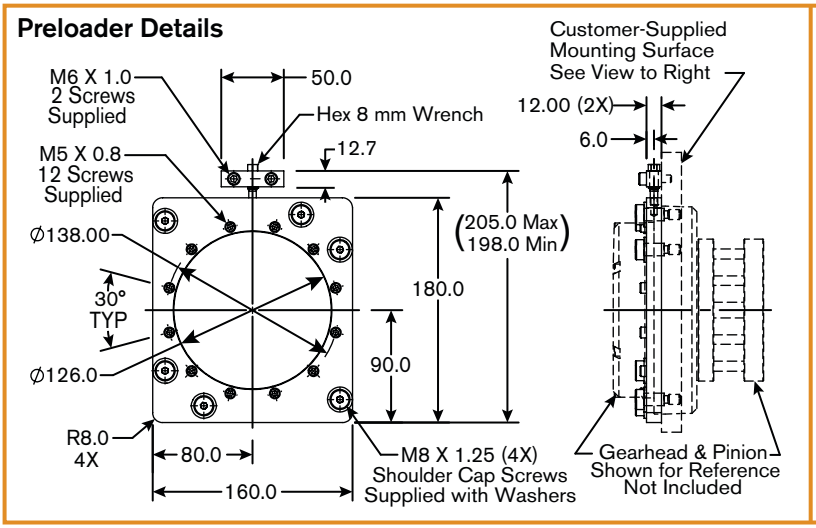

Customer Mounting Surface Details

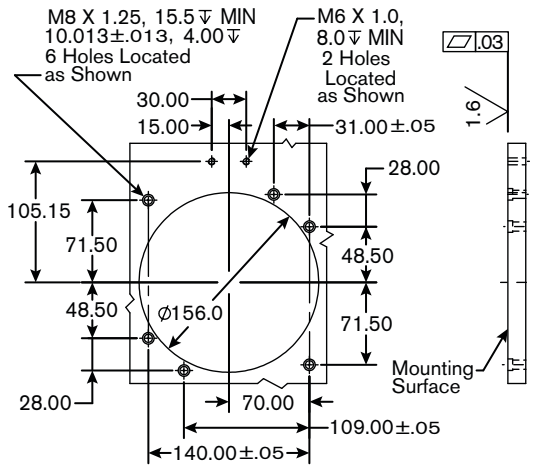

HGP50 Product Number 960875

Preloader Details

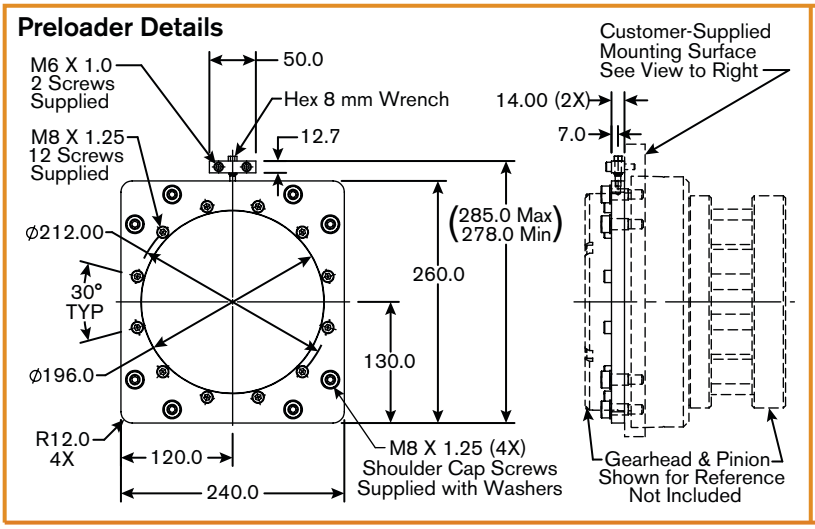

Customer Mounting Surface Details

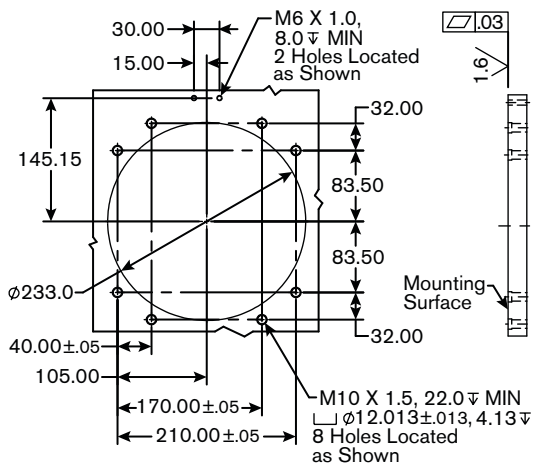

APPENDIX: UNDERSTANDING THE TECHNOLOGY

The revolutionary technology of Nexen's line of precision motion control products is changing the industry. New standards for precision, efficiency and ease of use are being set. The following section goes even deeper into the performance characteristics of these products. You'll find details about:

ArcSecond

Backlash

Corrosion Resistance

Efficiency

Life Rating

Lubrication Free Operation

Mass vs. Weight

Noise Rating

Operating Temperature Range

Positional Accuracy

Series Differentiation

Shock Factor

Appendix: Definitions & Notes

ARCSECOND
ArcSecond is a unit of angular measurement equal to $^{1}/_{3600}$ of a degree.

BACKLASH
The innovative design of the RPS tooth allows for a zero-backlash drive system. Because zero backlash is impossible to measure, industry standard maintains that anything under 3.2 microns is considered zero.

CORROSION RESISTANCE
Nexen makes no corrosion resistance claims for specific applications but does offer various corrosion countermeasures that include stainless steel and various surface treatments or coatings. Nexen will convey all material and coating specifications, but it is up to the customer to determine application suitability based on this information and/or thorough sample testing.

EFFICIENCY
The RPS system uses needle bearings to support the rollers that engage the teeth. This eliminates the sliding friction found in many other motion control systems and gives it an efficiency greater than 99%. This high efficiency means little is lost to friction, heat, and wear, providing a long life of 60,000,000 pinion revolutions (up to 36 million meters of travel).

LIFE RATING

Pinions: Pinion life is based on L10 of the bearing components. Just like any bearing, environmental conditions will affect life. The product rating is assuming a clean environment with normal manufacturing facility temperatures.

Pinion performance tends to be constant over its life with a rapid deterioration at the end of life as the needle bearings supporting the rollers fail.

Racks & Gears: The rack and gears have their own specific life ratings depending on model, and in some cases RPS size, and is based on tooth contacts at allowed loads and speeds. The combined pinion and rack or gear that makes up a given RPS or RPG system will have the combined life of the lower-rated component and will be greatly effected by machine design, RPS or RPG installation, operating patterns, and receiving recommended lubrication intervals while operated in a clean, dry, 20° C environment.

Rack wear is relatively linear over its life. Application and environmental conditions and lubrication intervals will impact expected product life. Depending on the length of the rack or diameter of the gear and usage patterns, it is often possible to replace the pinion several times, restoring full system performance before the rack or gear would need replacement if the pinion is replaced before reaching the point where its failure starts damaging rack or gear teeth.

LUBRICATION FREE OPERATION
In some cases the RPS rack can be operated without lubrication on the rack teeth or pinion rollers. This is dependent on the specific rack model and the maximum speed being less than 30 m/min. The no-lubrication option generally applies to rack that has received a surface treatment and does not apply to bare steel models of rack or any gearing. See specifications for the specific rack model you are considering to know if this is possible.

Operating without tooth/roller lubrication will reduce tooth life but can be beneficial in food, pharmaceutical, clean room, and other applications where the grease could contaminate the environment, or applications with high levels environmental contaminates that would be attracted to the grease and accelerate the wear rate. Nexen can not calculate a life rating when running without lubrication due to the number of variables that impact life, but based on past experience, the reduction has been modest and far exceeds other mechanical drive alternatives.

Appendix: Definitions & Notes

MASS VS. WEIGHT

Mass is the quantity of matter contained in an object, while weight is the force by which the object is pulled to the earth due to gravity. Therefore, in this literature, mass is shown in kilograms (kg) and weight is shown in kilograms force (kgf).

NOISE RATING

The RPS system is nearly silent at low speeds and typically less than 75 dB at full speed. This is dependent on machine design, proper RPS installation, whether lubrication is used or not, and is difficult to isolate from other drive train and guiding system noise, so your results may vary.

OPERATING TEMPERATURE RANGE

This is the range that the RPS system will function in. Accuracy specifications are based on 20° C and thermal expansion/contraction will effect the accuracy of the RPS system. It is recommended the RPS system be installed at the highest temperature the system will be operated at and avoid wide temperature swings for maximum accuracy and performance.
For applications outside of this temperature range, or with wide temperature swings, contact Nexen for more information.

POSITIONAL ACCURACY

This is dependent on proper machine design and RPS product installation. Positional accuracy is measured at 20° C and subject to variations due to mounting surface irregularities, rigidity, installation accuracy, proper maintenance, and ambient temperature. To be conservative, the RPS rack transmitting accuracy has been rounded up to the next ±10 µm. Other rack positional accuracy specifications have been rounded up to the next ±5 µm. For RPG gearsets, the angular accuracy rating is increased (less accurate) by 5% and then rounded to the next whole number, except in the case of very large gears where rounding may be fractional. This allows customers to achieve Nexen accuracy ratings with reasonable effort. Higher performance can be obtained if machine design and tolerances are optimized.

SERIES DIFFERENTIATION

The RPS and RPG pinions, racks and gears have been made in different series (thicknesses) depending on the specific product and should not be mixed when matching a pinion to a given rack or gear. All current pinions, racks and gears are B-series. Series A pinions (discontinued) are interchangeable with C-series pinions (discontinued) and have a wider body with longer rollers than the B-series pinions. The current rack and gear products only use B-series pinions, and the previous gears could use either depending on the RPG size. B-series pinions will not physically fit on a C-series gear, and a C-series pinion would be compromised if used on a B-series rack or gear due to a higher bending moment on the rollers, which would reduce their lives.

SHOCK FACTOR

Shock Factor is a value given to represent the smoothness of operation. Accommodating for Shock Factor when calculating system requirements ensures more accurate product selection.

INDUSTRIES & APPLICATIONS

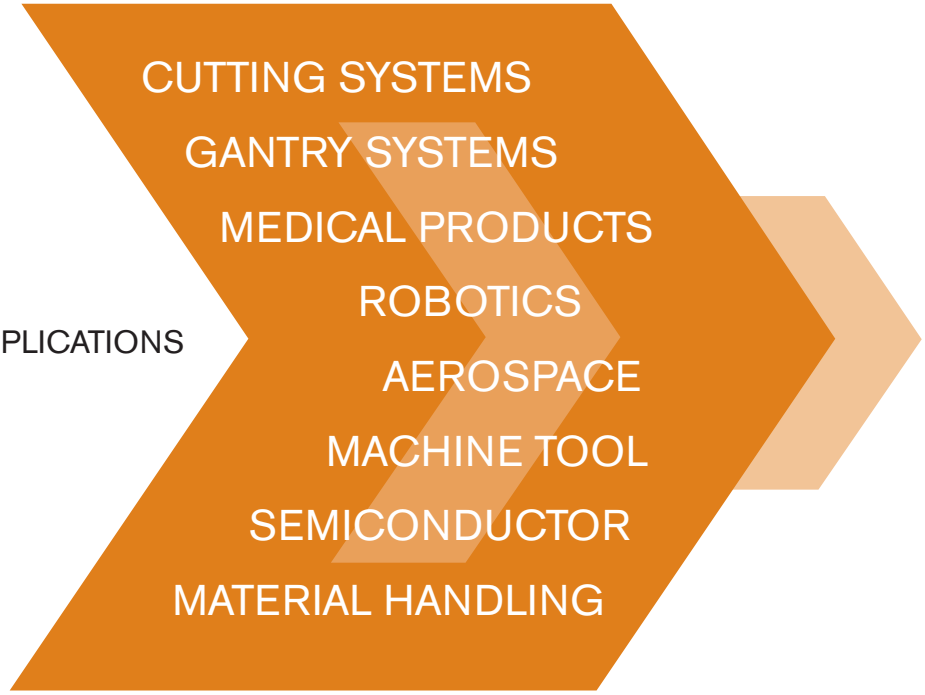

www.nexengroup.com

In accordance with Nexen's established policy of constant product improvement, the specifications contained in this document are subject to change without notice. Technical data listed in this document are based on the latest information available at the time of printing and are also subject to change without notice. For current information, please consult www.nexengroup.com or contact Nexen's Technical Support Group at the location to the right.

nexen®

Nexen Group, Inc.
560 Oak Grove Parkway
Vadnais Heights, MN 55127

(800) 843-7445
Fax: (651) 286-1099
www.nexengroup.com

Nexen has sales offices throughout the United States, Europe, Japan, and Australia.

ISO 9001 Certified

©2018 Nexen Group, Inc.

FORM NO. L-21282-J-1118