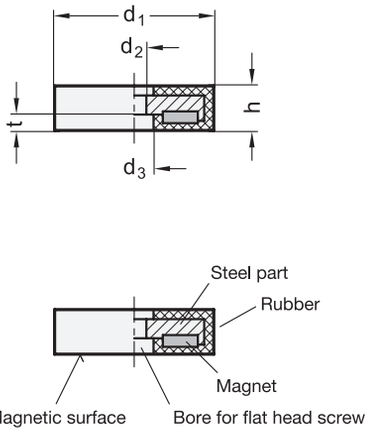

View of magnetic surface

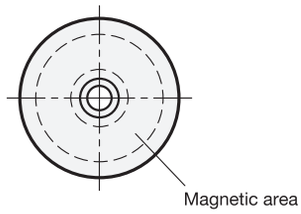

Metric

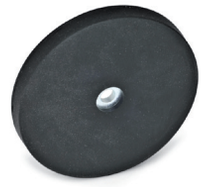

Metric table

Dimensions in: millimeters - *inches*

d_1	d_2	d_3	t	h	Nominal magnetic forces
18 *0.71*	3 *0.12*	8.2 *0.32*	3.5 *0.14*	6 *0.24*	25 N *5.62 lbf*
22 *0.87*	4 *0.16*	8.2 *0.32*	3.5 *0.14*	6 *0.24*	38 N *8.54 lbf*
31 *1.22*	6 *0.24*	9 *0.35*	3.5 *0.14*	6 *0.24*	89 N *20.01 lbf*
57 *2.24*	8 *0.31*	25.3 *1.00*	3.3 *0.13*	7.5 *0.30*	200 N *44.96 lbf*
66 *2.60*	5.5 *0.22*	22 *0.87*	3.2 *0.13*	8.5 *0.33*	250 N *56.20 lbf*

Specification

- Steel part
  Zinc plated
- Magnet material
  NdFeB **ND**
  Neodymium, iron, boron
  Temperature resistant up to 176 °F (80 °C)
- Rubber jacket
  Elastomer (TPE) ≈ 80 shore A
  - Black ● **SW**
  - White ○ **WS**
- *Elastomer Characteristics → page 2135*
- RoHS compliant

Accessory

- Magnet holding disks GN 70 → *page 2029*
- Self-adhesive disks GN 70.1 → *page 2030*

On request

- Other colors
- Other shore hardnesses

Information

GN 51.4 retaining magnets with rubber jacket, in combination with the steel part, form a system that shields and strengthens the magnet and concentrates the magnetic flux optimally on the rubberized magnetic surface.

The rubber protects sensitive surfaces from being damaged by the magnet and also has a high coefficient of friction, resulting in high lateral displacement forces.

see also...

- *More Information on Retaining Magnets → page 1990*
- *Retaining Magnets GN 51.3 (with Threaded Stud) → page 2010*
- *Retaining Magnets GN 57.1 (with Tapped Hole) → page 2012*
- *Retaining Magnets GN 50.4 (with Plain Hole) → page 2000*
- *Raw Magnets GN 55.1 (with Plain or Countersunk Hole) → page 2027*

How to order

GN 51.4-ND-31-WS

1	**Magnet material**
2	**Diameter d_1**
3	**Color**

⚠ **WARNING:** Cancer and Reproductive Harm — www.P65Warnings.ca.gov