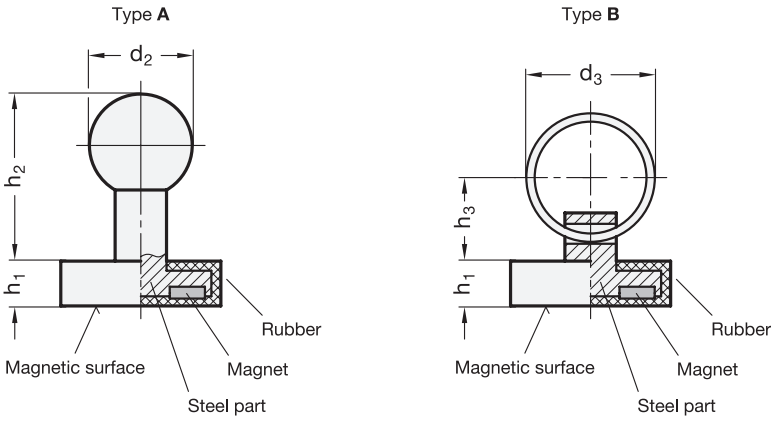

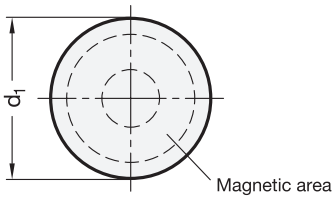



3 Type

A With ball knob
B With key ring

Universal table

Dimensions in: millimeters - *inches*

d_1	d_2	d_3	h_1	h_2	h_3	Nominal magnetic forces
22 *0.87*	16 *0.63*	20 *0.79*	6 *0.24*	25 *0.98*	13 *0.51*	35 N *7.87 lbf*
31 *1.22*	16 *0.63*	25 *0.98*	6 *0.24*	25 *0.98*	14.5 *0.57*	75 N *16.86 lbf*
43 *1.69*	16 *0.63*	30 *1.18*	5.5 *0.22*	24 *0.94*	17 *0.67*	85 N *19.11 lbf*

Specification

- Steel part
  Nickel plated
- Magnet material
  NdFeB **ND**
  Neodymium, iron, boron
  Temperature resistant up to 176 °F (80 °C)
- Rubber jacket
  Elastomer (TPE) ≈ 80 shore A
  Black
- Ball knob
  Plastic
  Technopolymer (Polyamide PA)
  Black, matte finish
- Key ring
  Steel, nickel plated
- *Elastomer Characteristics* → *page QVX*
- RoHS compliant

Accessory

- Magnet holding disks GN 70 → *page QVX*
- Self-adhesive disks GN 70.1 → *page QVX*

Information

GN 51.7 retaining magnets with rubber jacket, in combination with the steel part, form a system that shields and strengthens the magnet and concentrates the magnetic flux optimally on the rubberized magnetic surface.

The rubber protects sensitive surfaces from being damaged by the magnet and also has a high coefficient of friction, resulting in high lateral displacement forces.

see also...
- *More Information on Retaining Magnets* → *page QVX*
- *Retaining Cables GN 111.2* → *page QVX*
- *Retaining Magnets GN 50.6 (with Hook or Eyelet)* → *page QVX*
- *Retaining Magnets GN 51.9 (with Cable Tie Mount)* → *page QVX*

How to order

GN 51.7-ND-31-A

1	Magnet material
2	Diameter d_1
3	Type

WARNING: Cancer and Reproductive Harm — www.P65Warnings.ca.gov