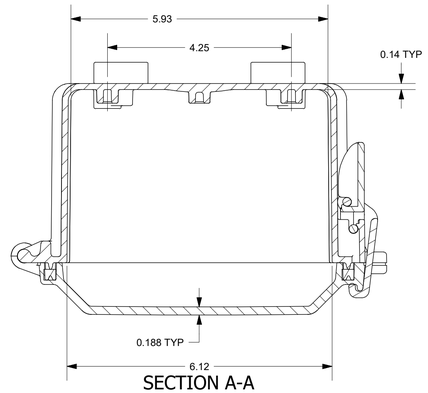

SECTION A-A

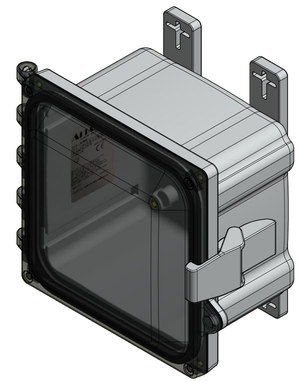

FOR REFERENCE ONLY
MOUNTING FEET SHOWN AS INSTALLED

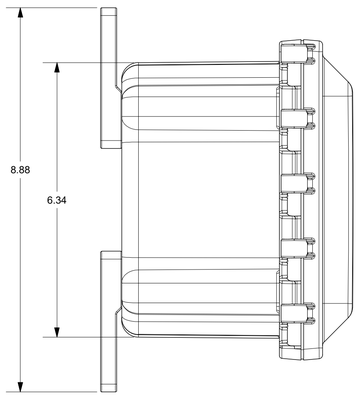

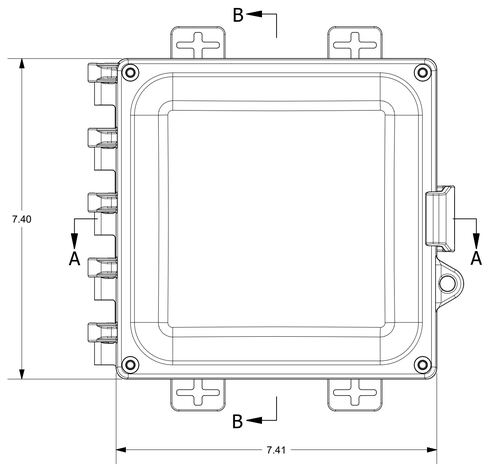

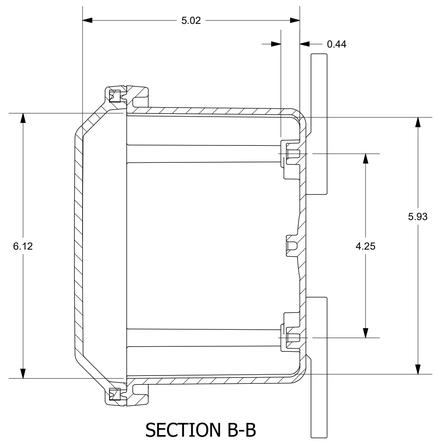

SECTION B-B

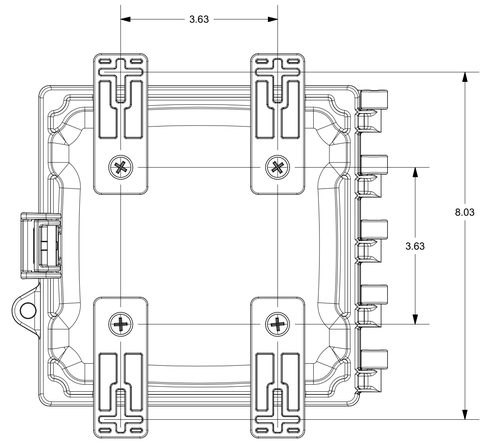

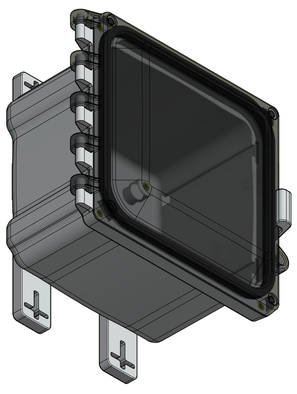

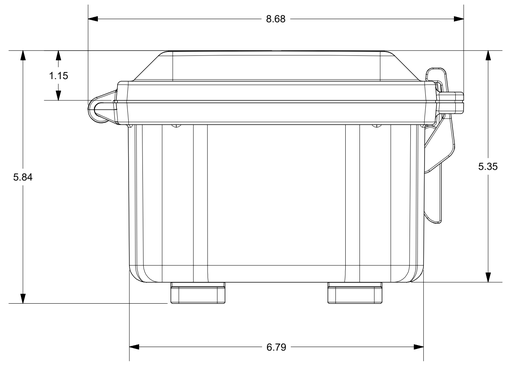

THIS DRAWING IS THE SOLE AND EXCLUSIVE PROPERTY OF ROBROY ENCLOSURES. NO PART OF THIS DRAWING MAY BE REPRODUCED, DISTRIBUTED, OR PUBLICALLY DISPLAYED IN ANY FORM OR BY ANY MEANS WITHOUT THE EXPRESS WRITTEN PERMISSION OF ROBROY ENCLOSURES. ALL RIGHTS RESERVED UNDER THE COPYRIGHT LAWS. COPYRIGHT © 2016 ROBROY ENCLOSURES

SPECIAL REQUIREMENTS

ASSEMBLY:

1. (1) ACCESSORY KIT (ATAHAK) SHALL BE PACKAGED LOOSELY INSIDE ENCLOSURE
   HARDWARE INCLUDED:
   -(4) #1/4-20 x 1/2 FLAT HEAD PHILLIPS MACHINE SCREW (RMSC1/4-20X.5FLPH)
   -(4) #10-32 x 5/8 PAN HEAD PHILLIPS MACHINE SCREW (RMSC10/32X5/8SS)
   -(4) #10-32 x 3/8 PAN HEAD SCREW (RMSC10/32X3/8ZN)
   -(4) #10 WASHER (RMWAS10ZN)
2. (1) STYROFOAM SHEET SHALL BE PLACED ON TOP OF COVER INSIDE CARTON

NEMA 250: TYPE 1, 3R, 4, 4X, 6P, 12	STANDARD P/N: AH664C	ALL DIMENSIONS ARE IN INCHES UNLESS OTHERWISE SPECIFIED	TOLERANCES UNLESS SPECIFIED .XX ± 0.03 .XXX ± 0.010
IEC 60529: IP66, IP68			
COLOR: N/A COLOR STANDARD: PANTONE 7541 C	CUSTOMER DWG:		

MATERIAL: POLYCARBONATE

REVISION HISTORY

REV	DESCRIPTION	DATE	ENG
-	-	-	-
-	-	-	-
-	-	-	-
-	-	-	-
-	-	-	-
-	-	-	-

ATTABOX™ WWW.ATTABOX.COM

Robroy Enclosures
500 Maple Street
Belding, Michigan 48809
Phone: 616-794-0700
Fax: 616-749-3378

DRAWN BY	DATE	CUSTOMER	DWG
DRH	10/15/16		AH664C
SCALE	DESCRIPTION		PART NUMBER
DO NOT SCALE	STANDARD ENCLOSURE		ATAH664C

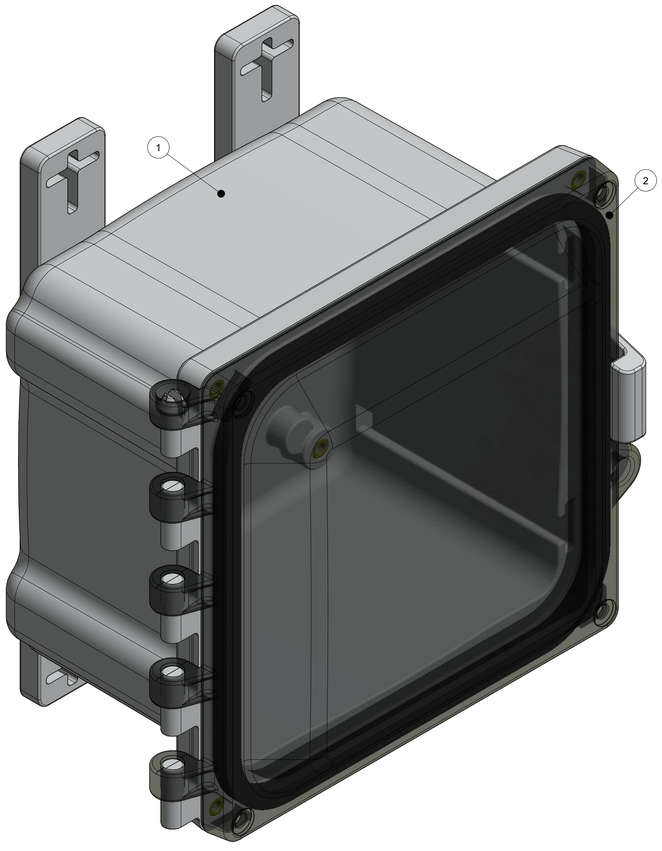

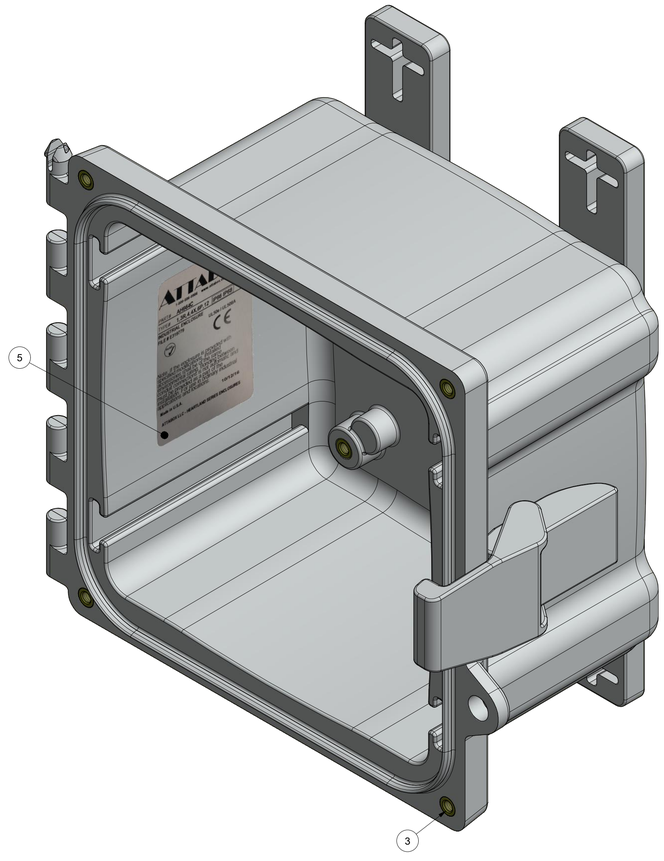

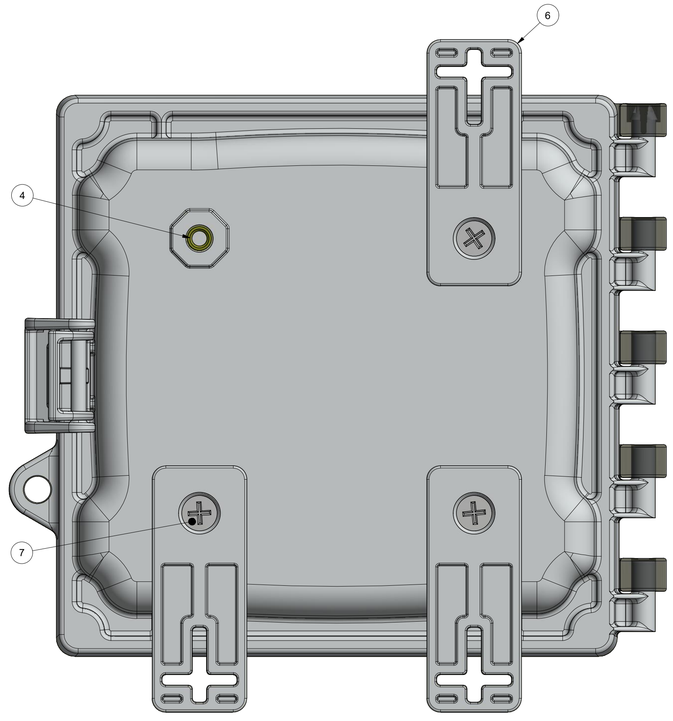

BACK SIDE

(1) MOUNTING FOOT REMOVED FOR CLARITY
TORQUE SCREWS TO 10-14 IN.-LBS.

PARTS LIST			
ITEM	QTY	PART NUMBER	DESCRIPTION
1	1	WPPC664BOX	AH664C MOLDED BOX
2	1	WPPCC664U	AH664C GASKETED CLEAR COVER
3	8	RMAHINS10-32UNF	#10-32 UNF COVER & BACK PANEL BRASS INSERT
4	4	RMAHINS1/4-20UNC	1/4-20 UNC MOUNTING FOOT BRASS INSERT
5	1	RMLABBLANK3X2	AH664C LABEL
6	4	RMAHFOOT-001	MOUNTING FOOT (INCLUDED WITH ATAHAK)
7	4	RMSC1/4-20X.5FLPH	1/4-20 x 1/2 FLAT HEAD PHILLIPS MACHINE SCREW
8	1	ATAHAK	ACCESSORY KIT (INCLUDES MOUNTING FEET)

THIS DRAWING IS THE SOLE AND EXCLUSIVE PROPERTY OF ROBROY ENCLOSURES. NO PART OF THIS DRAWING MAY BE REPRODUCED, DISTRIBUTED, OR PUBLICALLY DISPLAYED IN ANY FORM OR BY ANY MEANS WITHOUT THE EXPRESS WRITTEN PERMISSION OF ROBROY ENCLOSURES. ALL RIGHTS RESERVED UNDER THE COPYRIGHT LAWS. COPYRIGHT © 2016 ROBROY ENCLOSURES

SPECIAL REQUIREMENTS

ASSEMBLY:

1. (1) ACCESSORY KIT (ATAHAK) SHALL BE PACKAGED LOOSELY INSIDE ENCLOSURE
   (8) HARDWARE INCLUDED:
   - -(4) #1/4-20 x 1/2 FLAT HEAD PHILLIPS MACHINE SCREW (RMSC1/4-20X.5FLPH)
   - -(4) #10-32 x 5/8 PAN HEAD PHILLIPS MACHINE SCREW (RMSC10/32X5/8SS)
   - -(4) #10-32 x 3/8 PAN HEAD SCREW (RMSC10/32X3/8ZN)
   - -(4) #10 WASHER (RMWAS10ZN)
2. (1) STYROFOAM SHEET SHALL BE PLACED ON TOP OF COVER INSIDE CARTON

NEMA 250: TYPE 1, 3R, 4, 4X, 6P, 12 IEC 60529: IP66, IP68	STANDARD P/N: AH664C
COLOR: N/A COLOR STANDARD: PANTONE 7541 C	CUSTOMER DWG:
MATERIAL: POLYCARBONATE	

ALL DIMENSIONS ARE IN INCHES
UNLESS OTHERWISE SPECIFIED

TOLERANCES	.XX	.XXX
UNLESS SPECIFIED	± 0.03	± 0.010

ATTABOX™
WWW.ATTABOX.COM

Robroy Enclosures
500 Maple Street
Belding, Michigan 48809
Phone: 616-794-0700
Fax: 616-749-3378

DRAWN BY	DATE	CUSTOMER	DWG
DRH	10/15/16		AH664C
SCALE		DESCRIPTION	PART NUMBER
DO NOT SCALE		STANDARD ENCLOSURE	ATAH664C