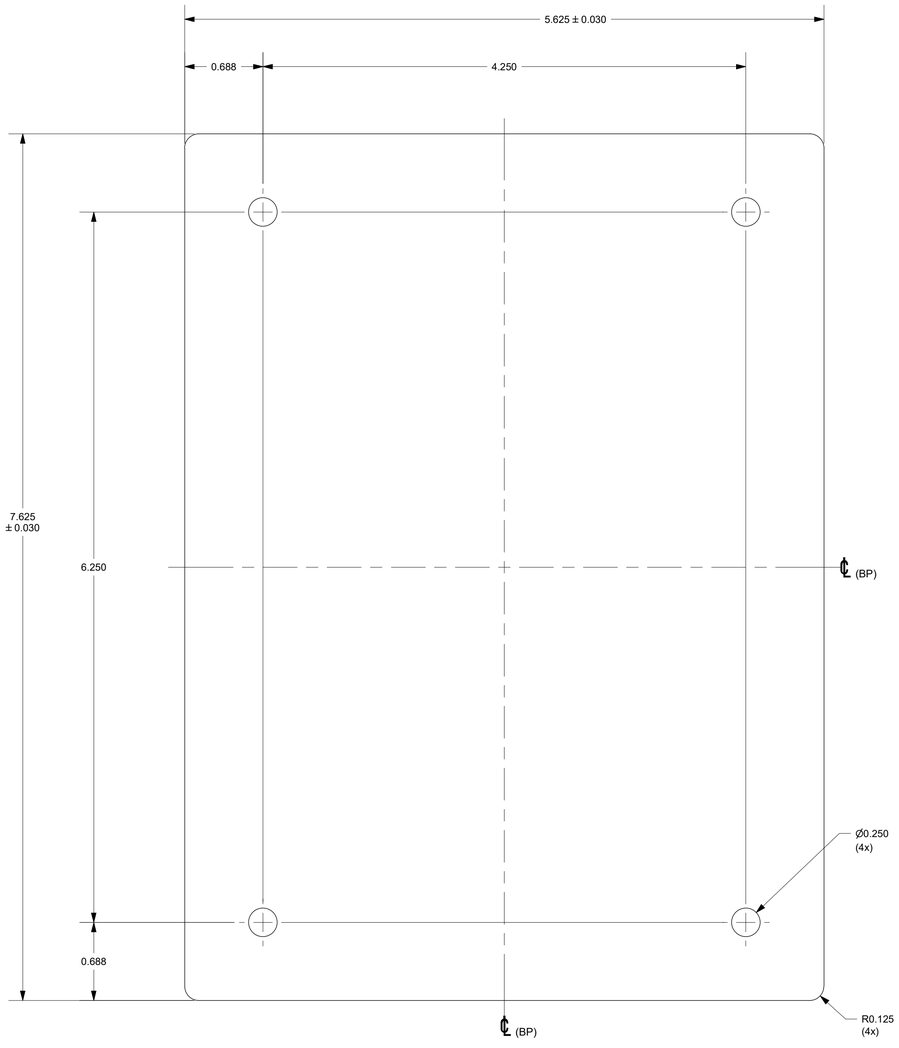


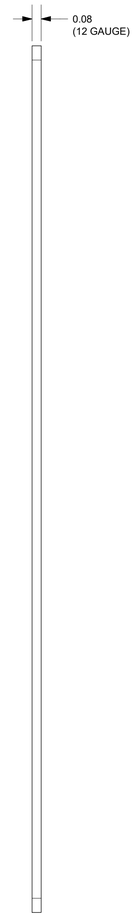


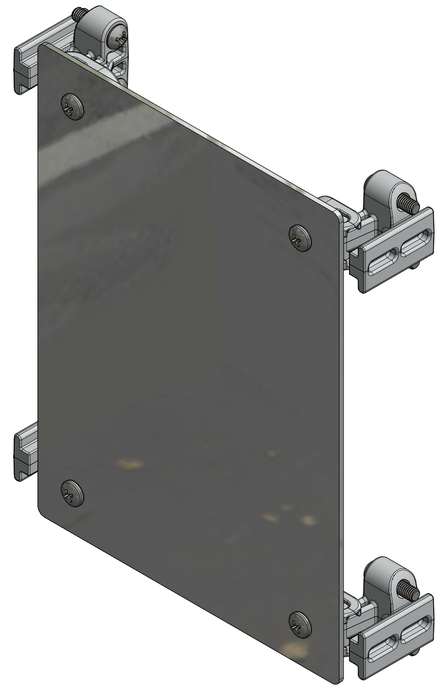

FOR REFERENCE ONLY
SWING PANEL MOUNTS SHOWN AS INSTALLED

**NOTES:**
1. PANEL SHALL BE FREE FROM BURRS & SHARP EDGES
2. PANEL SHALL BE FLAT
3. MISALIGNED EDGES EXCEEDING 0.005" (STEPS) SHALL NOT BE PERMITTED
4. ALL EDGES SHALL BE SQUARE AND PARALLEL
5. PANEL SHALL HAVE CLEAR PVC FILM ON ONE SIDE
6. ALL "2424" SIZE PANELS AND BELOW SHALL BE PACKAGED IN AN ENVELOPE WITH NO METAL (CLASP)
7. ALL "3020" SIZE PANELS AND ABOVE SHALL BE PACKAGED IN CARDBOARD WITH NO METAL (STAPLES)

**ASSEMBLY:**
1. SWING PANEL KIT INCLUDES THE FOLLOWING:
   -(1) ALUMINUM SWING PANEL (RMAH86SP)
   -(1) SWING PANEL MOUNT KIT (ATAHSPM)

**SPECIAL REQUIREMENTS**

THIS DRAWING IS THE SOLE AND EXCLUSIVE PROPERTY OF ROBROY ENCLOSURES. NO PART OF THIS DRAWING MAY BE REPRODUCED, DISTRIBUTED, OR PUBLICALLY DISPLAYED IN ANY FORM OR BY ANY MEANS WITHOUT THE EXPRESS WRITTEN PERMISSION OF ROBROY ENCLOSURES. ALL RIGHTS RESERVED UNDER THE COPYRIGHT LAWS. COPYRIGHT © 2016 ROBROY ENCLOSURES

| | |
|---|---|
| NEMA 250: TYPE N/A | STANDARD P/N: AH86SPK |
| IEC 60529: N/A | |
| COLOR: N/A | CUSTOMER DWG: |
| COLOR STANDARD: N/A | |

MATERIAL: 3003-H14 ALUMINUM

REVISION HISTORY

| REV | DESCRIPTION | DATE | ENG |
|---|---|---|---|
| - | - | - | - |
| - | - | - | - |
| - | - | - | - |
| - | - | - | - |
| - | - | - | - |
| - | - | - | - |

ALL DIMENSIONS ARE IN INCHES UNLESS OTHERWISE SPECIFIED

TOLERANCES UNLESS SPECIFIED .XX ± 0.03 .XXX ± 0.010

ATTABOX™
WWW.ATTABOX.COM

*Robroy Enclosures*
*500 Maple Street*
*Belding, Michigan 48809*
*Phone: 616-794-0700*
*Fax: 616-749-3378*

| DRAWN BY | DATE | CUSTOMER | DWG |
|---|---|---|---|
| DRH | 08/31/16 | | AH86SPK |

| SCALE | DESCRIPTION | PART NUMBER |
|---|---|---|
| DO NOT SCALE | STANDARD SWING PANEL KIT | ATAH86SPK |