

DETAIL C

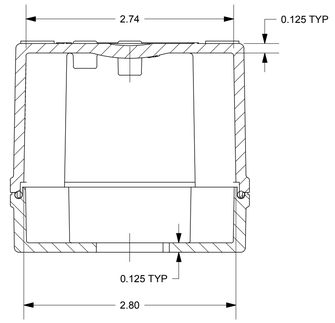

SECTION A-A

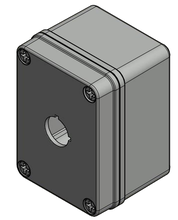

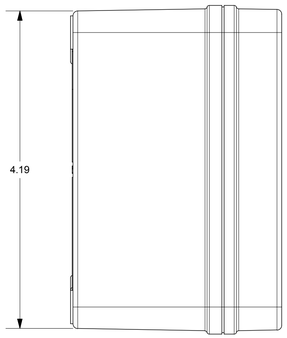

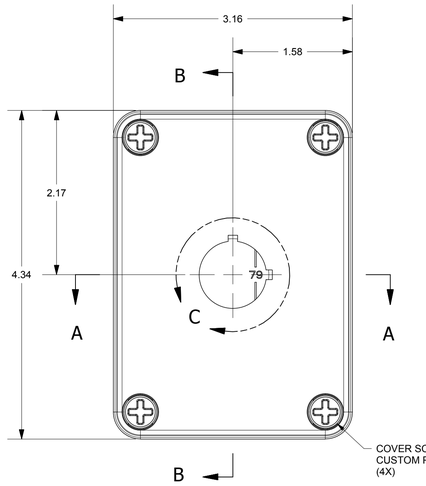

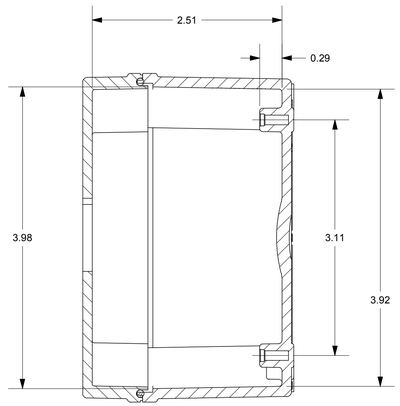

SECTION B-B

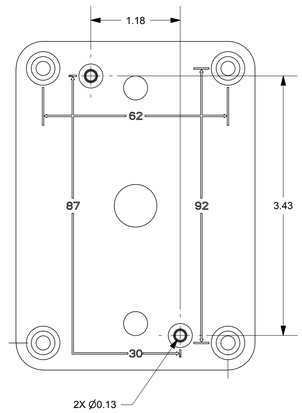

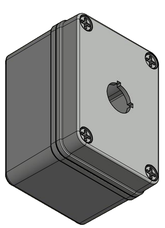

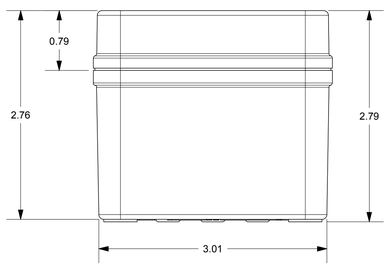

END USER NOTES:
1. TORQUE COVER SCREWS TO 16 IN.-LBS. TO MAINTAIN RATINGS

THIS DRAWING IS THE SOLE AND EXCLUSIVE PROPERTY OF ROBROY ENCLOSURES. NO PART OF THIS DRAWING MAY BE REPRODUCED, DISTRIBUTED, OR PUBLICALLY DISPLAYED IN ANY FORM OR BY ANY MEANS WITHOUT THE EXPRESS WRITTEN PERMISSION OF ROBROY ENCLOSURES. ALL RIGHTS RESERVED UNDER THE COPYRIGHT LAWS. COPYRIGHT © 2017 ROBROY ENCLOSURES

SPECIAL REQUIREMENTS

NEMA 250: TYPE 1, 3R, 4X, 6P, 12 IEC 60529: IP66, IP67, IP68	STANDARD P/N: COPC1PB22	ALL DIMENSIONS ARE IN INCHES UNLESS OTHERWISE SPECIFIED	TOLERANCES UNLESS SPECIFIED .XX ± 0.03 .XXX ± 0.010
COLOR: GLACIER GRAY (WPR3013) COLOR STANDARD: PANTONE 428 C	CUSTOMER DWG:		
MATERIAL: FIBERGLASS REINFORCED POLYESTER (FRP)			

REVISION HISTORY

REV	DESCRIPTION	DATE	ENG
-	-	-	-
-	-	-	-
-	-	-	-
-	-	-	-
-	-	-	-
-	-	-	-

AttaBox
WWW.ATTABOX.COM

Robroy Enclosures
500 Maple Street
Belding, Michigan 48809
Phone: 616-794-0700
Fax: 616-749-3378

DRAWN BY: E91	DATE: 05/19/17	CUSTOMER	DWG: COPC1PB22
SCALE: DO NOT SCALE	DESCRIPTION: STANDARD ENCLOSURE		PART NUMBER: ATCOPC1PB22