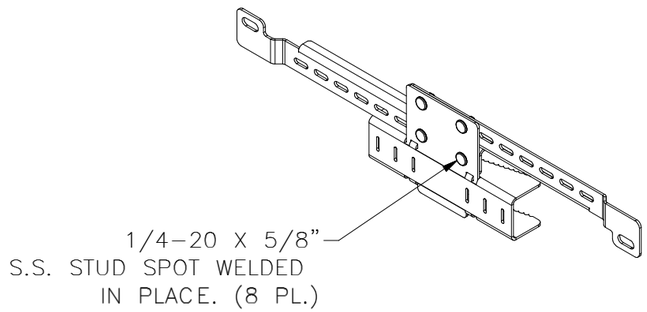

TOP BRACKET ISOMETRIC VIEW

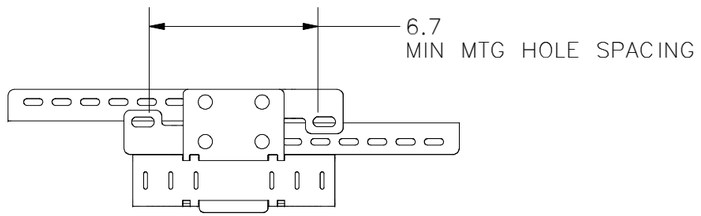

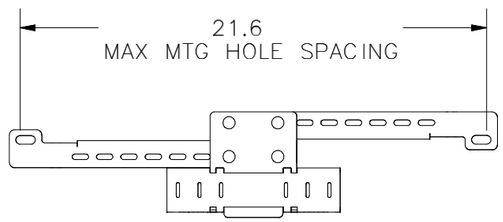

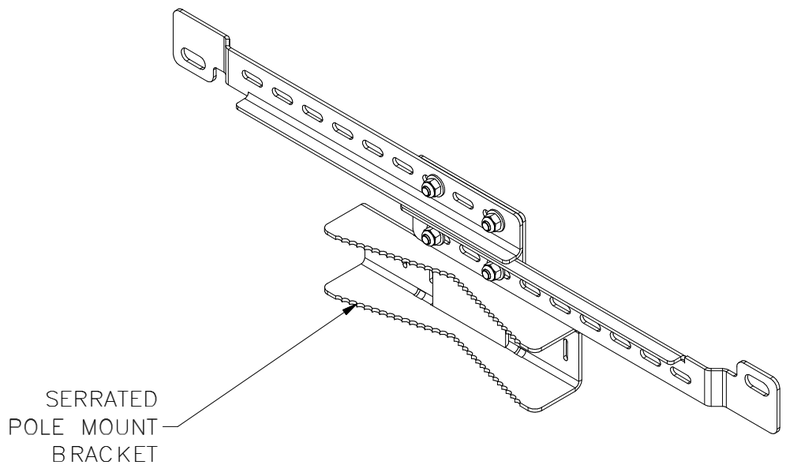

ISOMETRIC VIEW

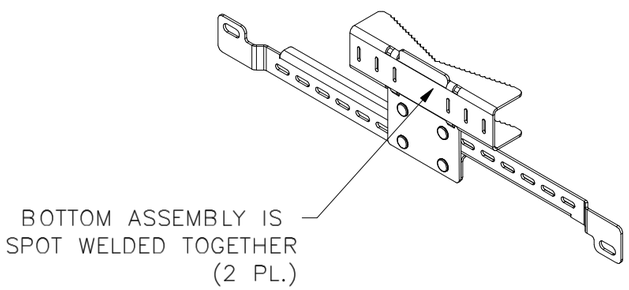

BOTTOM BRACKET ISOMETRIC VIEW

PART#: PMKSMLSS
(DATA SUBJECT TO CHANGE WITHOUT NOTICE)

THIS DRAWING IS PROPERTY OF HUBBELL INC. WIEGMANN
ALL INFORMATION IS PROPRIETARY AND NOT TO BE DUPLICATED