PART#: WRD72XM7718FSD4
(DATA SUBJECT TO CHANGE WITHOUT NOTICE)

THIS DRAWING IS PROPERTY OF HUBBELL INC.
WIEGMANN
ALL INFORMATION IS PROPRIETARY AND NOT TO BE DUPLICATED

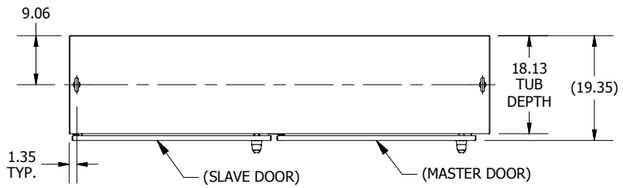

TOP VIEW

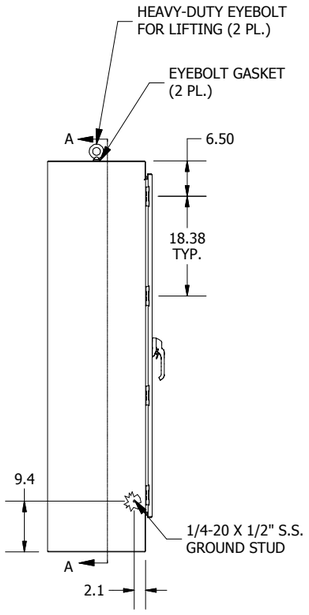

LEFT SIDE VIEW

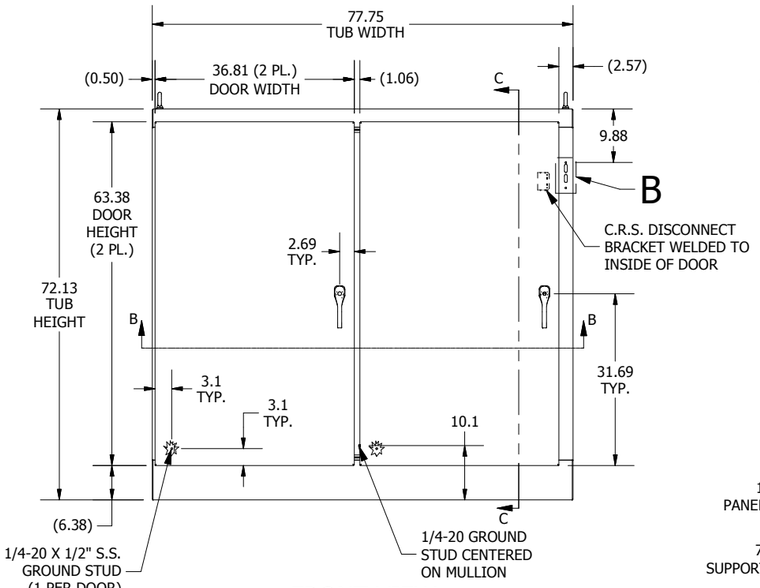

FRONT VIEW

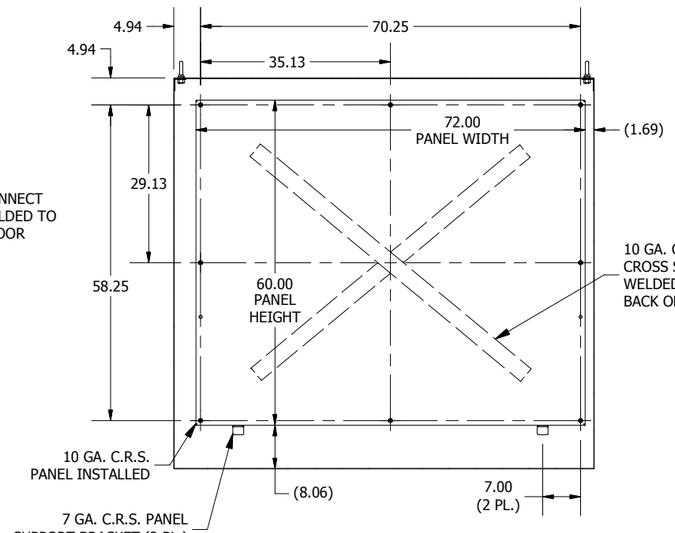

SECTION A-A
(INSIDE BACK OF ENCL.)

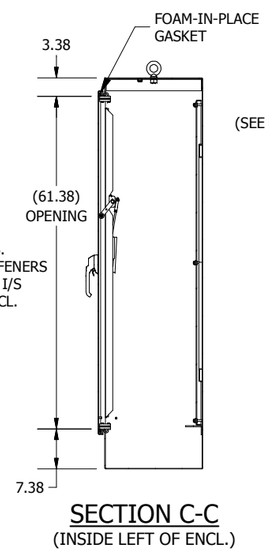

SECTION C-C
(INSIDE LEFT OF ENCL.)

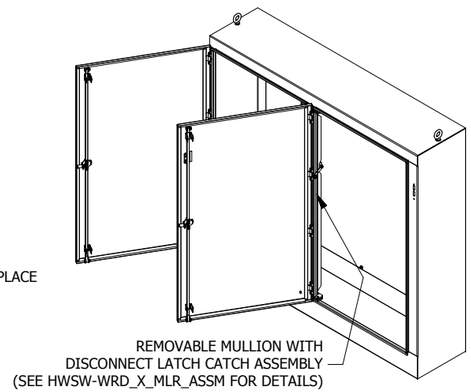

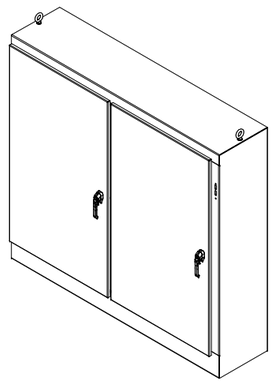

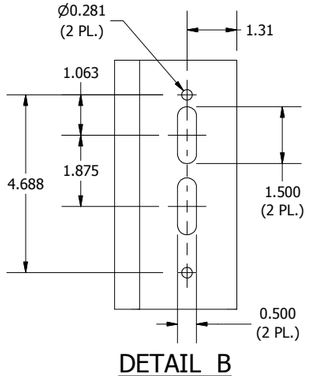

DETAIL B
(DISCONNECT CUTOUT DETAIL)

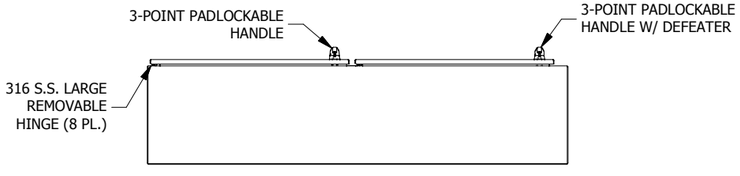

BOTTOM VIEW

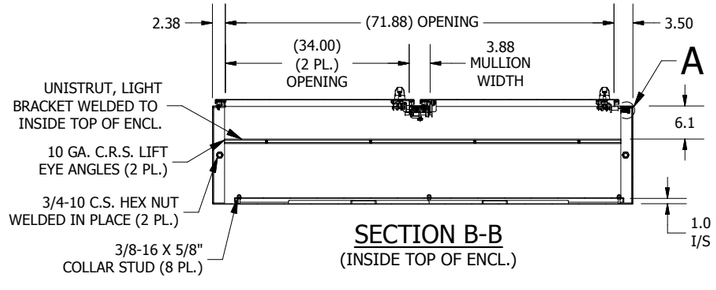

SECTION B-B
(INSIDE TOP OF ENCL.)

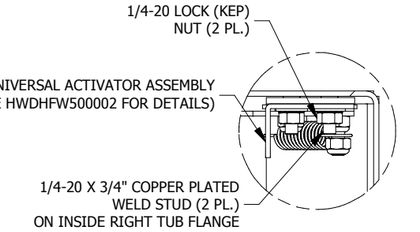

DETAIL A
(UNIV. ACTIVATOR INSTALL)