HUBBELL®

WIEGMANN®

Commercial and Industrial Enclosures

KwikHinge™ Series Enclosures Featuring Removable Hinge Pins

Hinge Pin

Removes In Seconds!





KwikHinge™ Enclosures
Feature Sliding Hinge Pins for Quick Door Removal

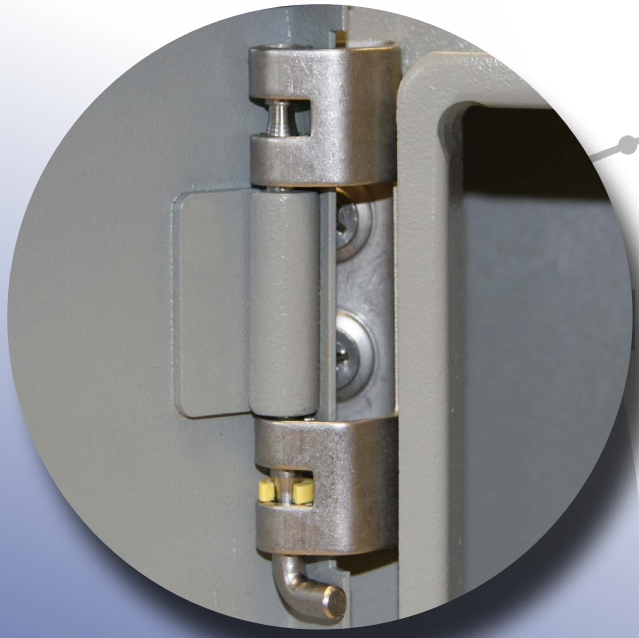

HEAVY DUTY

Stainless Steel Hinge Pin:

*Sub-panel installations and door modifications are **fast and easy***

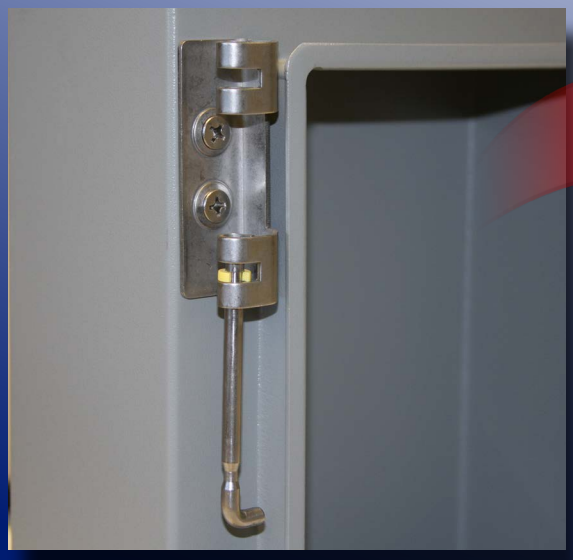

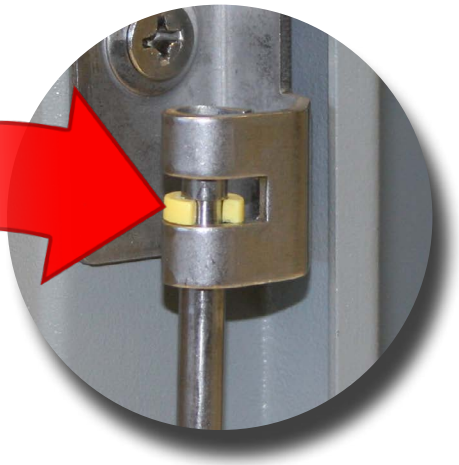

Retainer Clip:

Eliminates hinge pin loss



Concealed Hinge:

Invisibly mounted on back side of door

KwikHinge™ SERIES
Removable Hinge Pins, Single & Double Door



Application

Designed to protect electrical and electronic controls, components, and instruments in typical industrial environments. Enclosures protect equipment from dust, dirt and water. These enclosures are used in machine tool applications for housing motor starters, drives, contractors, PLC's, as well as a wide variety of other electrical and electronic equipment. The addition of 19 inch rack mounted accessories make these enclosures ideal for providing rugged protection for sensitive rack mounted components in harsh industrial environments.

Industry Standards

UL Listed Types 3R, 4 and 12
NEMA Types 3R, 4 and 12
UL Classified IEC 60529 IP66

Features

- Fabricated from Carbon Steel and 304 Stainless Steel
- ANSI 61 Gray Polyester Powder Coat
- Heavy Duty 316 Stainless Steel Removable Hinges (patent pending)
- Continuously welded seams ground smooth
- Heavy duty lifting eyes for easy handling
- 3-point key-locking/padlocking combo handle
- Doors sealed with poured in place gasket
- Ground provisions provided
- Door opens 170°
- "Uni-strut" mounting channels are welded horizontally to interior body sides to allow back panels to be positioned in enclosure. Optional swing, half, full panels and rack angles can be mounted anywhere along "uni-strut" channel

WRD-FS4
Removable Hinge Pins

Single Door



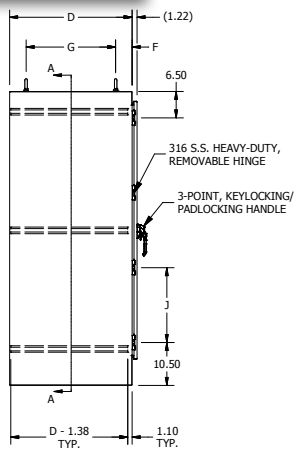

Left Side View

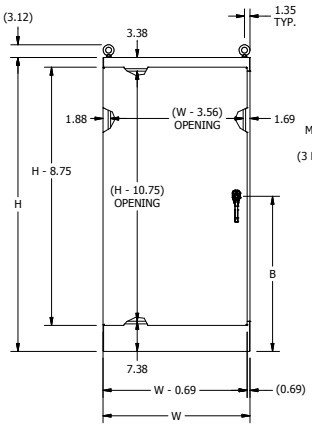

Front View

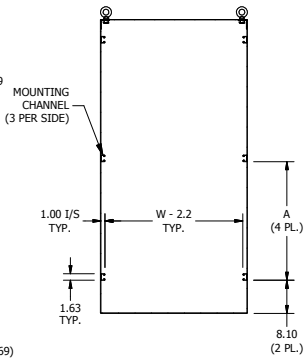

Section A-A
(inside back of encl.)

CATALOG NUMBER	ENCLOSURE SIZE H X W X D	A	B	F	G	J	NUMBER OF HINGES
WRD602418FS4	60.13 x 24.13 x 18.13 (1527x613x460)	23.13 (587)	32.06 (814)	9.06 (230)	N/A	21.56 (548)	3
WRD722418FS4	72.13 x 24.13 x 18.13 (1832x613x460)	29.13 (740)	38.06 (967)	9.06 (230)	N/A	18.38 (467)	4
WRD723018FS4	72.13 x 30.13 x 18.13 (1832x765x460)	29.13 (740)	38.06 (967)	9.06 (230)	N/A	18.38 (467)	4
WRD723618FS4	72.13 x 36.13 x 18.13 (1832x918x460)	29.13 (740)	38.06 (967)	9.06 (230)	N/A	18.38 (467)	4
WRD902420FS4	90.13 x 24.13 x 20.13 (2289x613x511)	38.13 (968)	47.06 (1195)	10.06 (256)	N/A	18.28 (464)	5
WRD903620FS4	90.13 x 36.13 x 20.13 (2289x918x511)	38.13 (968)	47.06 (1195)	10.06 (256)	N/A	18.28 (464)	5
WRD603624FS4	60.13 x 36.13 x 24.13 (1527x918x613)	23.13 (587)	32.06 (814)	12.06 (306)	N/A	21.56 (548)	3
WRD722424FS4	72.13 x 24.13 x 24.13 (1832x613x613)	29.13 (740)	38.06 (967)	12.06 (306)	N/A	18.38 (467)	4
WRD723024FS4	72.13 x 30.13 x 24.13 (1832x765x613)	29.13 (740)	38.06 (967)	12.06 (306)	N/A	18.38 (467)	4
WRD723624FS4	72.13 x 36.13 x 24.13 (1832x918x613)	29.13 (740)	38.06 (967)	12.06 (306)	N/A	18.38 (467)	4
WRD903624FS4	90.13 x 36.13 x 24.13 (2289x918x613)	38.13 (968)	47.06 (1195)	12.06 (306)	N/A	18.28 (464)	5
WRD723630FS4	72.13 x 36.13 x 30.13 (1832x918x765)	29.13 (740)	38.06 (967)	4.06 (103)	22.00 (559)	18.38 (467)	4
WRD723636FS4	72.13 x 36.13 x 36.13 (1832x918x918)	29.13 (740)	38.06 (967)	4.06 (103)	28.00 (711)	18.38 (467)	4
WRD903636FS4	90.13 x 36.13 x 36.13 (2289x918x918)	38.13 (968)	47.06 (1195)	4.06 (103)	28.00 (711)	18.28 (464)	5

WRD-FSD4
Removable Hinge Pins

Double Door

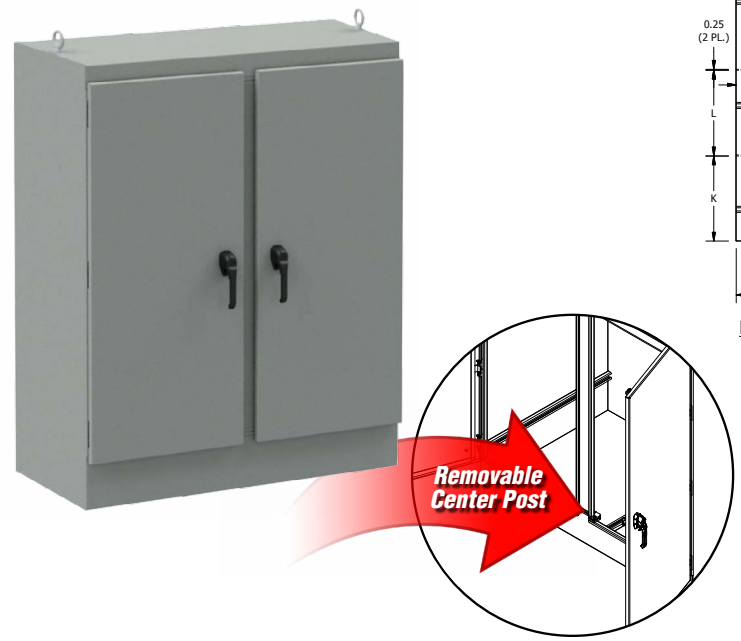

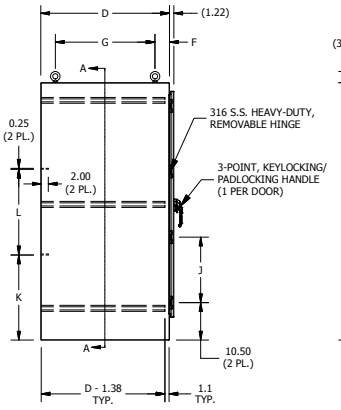

Left Side View

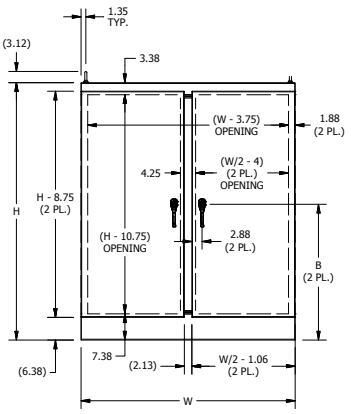

Front View

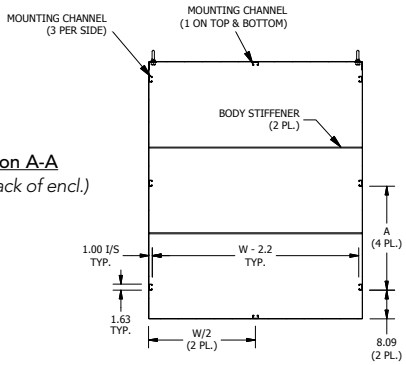

Section A-A
(inside back of encl.)

CATALOG NUMBER	ENCLOSURE SIZE H X W X D	A	B	F	G	J	NUMBER OF HINGES	K	L
WRD604818FSD4	60.13 x 48.13 x 18.13 (1527x1222x460)	23.13 (587)	32.06 (814)	9.06 (230)	N/A	21.56 (548)	3	19.88 (505)	20.03 (509)
WRD724818FSD4	72.13 x 48.13 x 18.13 (1832x1222x460)	29.13 (740)	38.06 (967)	9.06 (230)	N/A	18.38 (467)	4	23.88 (607)	24.03 (610)
WRD726018FSD4	72.13 x 60.13 x 18.13 (1832x1527x460)	29.13 (740)	38.06 (967)	9.06 (230)	N/A	18.38 (467)	4	23.88 (607)	24.03 (610)
WRD727218FSD4	72.13 x 72.13 x 18.13 (1832x1832x460)	29.13 (740)	38.06 (967)	9.06 (230)	N/A	18.38 (467)	4	23.88 (607)	24.03 (610)
WRD904820FSD4	90.13 x 48.13 x 20.13 (2289x1222x511)	38.13 (968)	47.06 (1195)	10.06 (256)	N/A	18.28 (464)	5	29.88 (759)	30.03 (763)
WRD907220FSD4	90.13 x 72.13 x 20.13 (2289x1832x511)	38.13 (968)	47.06 (1195)	10.06 (256)	N/A	18.28 (464)	5	29.88 (759)	30.03 (763)
WRD724824FSD4	72.13 x 48.13 x 24.13 (1832x1222x613)	29.13 (740)	38.06 (967)	12.06 (306)	N/A	18.38 (467)	4	23.88 (607)	24.03 (610)
WRD726024FSD4	72.13 x 60.13 x 24.13 (1832x1527x613)	29.13 (740)	38.06 (967)	12.06 (306)	N/A	18.38 (467)	4	23.88 (607)	24.03 (610)
WRD727224FSD4	72.13 x 72.13 x 24.13 (1832x1832x613)	29.13 (740)	38.06 (967)	12.06 (306)	N/A	18.38 (467)	4	23.88 (607)	24.03 (610)
WRD907224FSD4	90.13 x 72.13 x 24.13 (2289x1832x613)	38.13 (968)	47.06 (1195)	12.06 (306)	N/A	18.28 (464)	5	29.88 (759)	30.03 (763)
WRD726036FSD4	72.13 x 36.13 x 36.13 (1832x1527x918)	29.13 (740)	38.06 (967)	4.06 (103)	28.00 (711)	18.38 (467)	4	23.88 (607)	24.03 (610)
WRD907236FSD4	90.13 x 36.13 x 36.13 (2289x1832x918)	38.13 (968)	47.06 (1195)	4.06 (103)	28.00 (711)	18.28 (464)	5	29.88 (759)	30.03 (763)

WRD-XM-FS4 & WRD-XM-FSD4

Removable Hinge Pins, Single & Double Door

Single Door



WRD72XM2718FS4

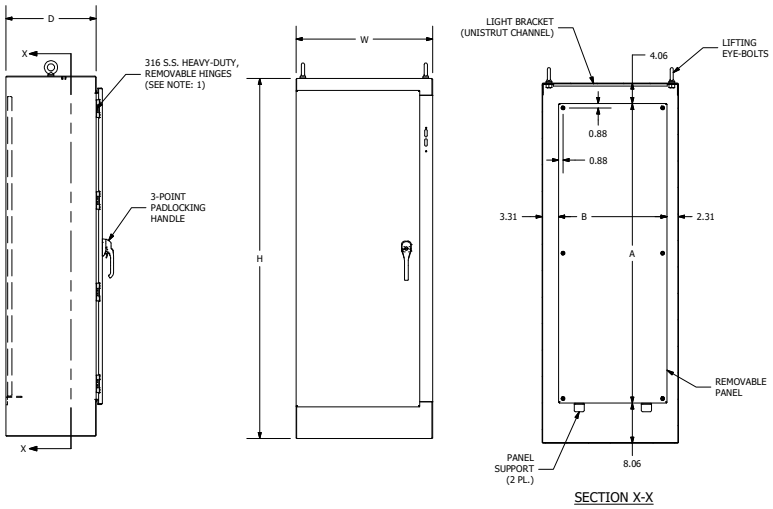

SECTION X-X

Double Door



WRD72XM5318FSD4

CATALOG NUMBER	ENCLOSURE SIZE H X W X D	NUMBER OF HINGES
WRD72XM2718FS4	72 x 27 x 18	4
WRD72XM3318FS4	72 x 33 x 18	4
WRD72XM3918FS4	72 x 39 x 18	4
WRD84XM3918FS4	84 x 39 x 18	5
WRD90XM3920FS4	90 x 39 x 20	5
WRD90XM3924FS4	90 x 39 x 24	5
WRD72XM5318FSD4	72 x 53 x 18	4
WRD72XM6518FSD4	72 x 65 x 18	4
WRD72XM7718FSD4	72 x 77 x 18	4
WRD72XM7724FSD4	72 x 77 x 24	4
WRD84XM7718FSD4	84 x 77 x 18	5
WRD90XM7720FSD4	90 x 77 x 20	5
WRD90XM7724FSD4	90 x 77 x 24	5

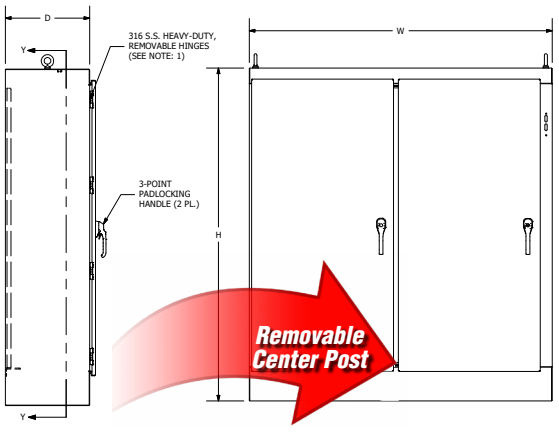

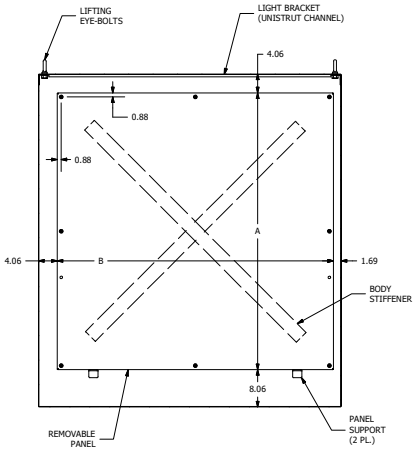

NOTES:

1. Four hinges are provided per door when “H” = 72"
   Five hinges are provided per door when “H” = 84" or 90"

WRD-SSFSN4 & WRD-SSFSDN4

Removable Hinge Pins, Single & Double Door, Stainless Steel

Single Door



WRD722418SSFSN4

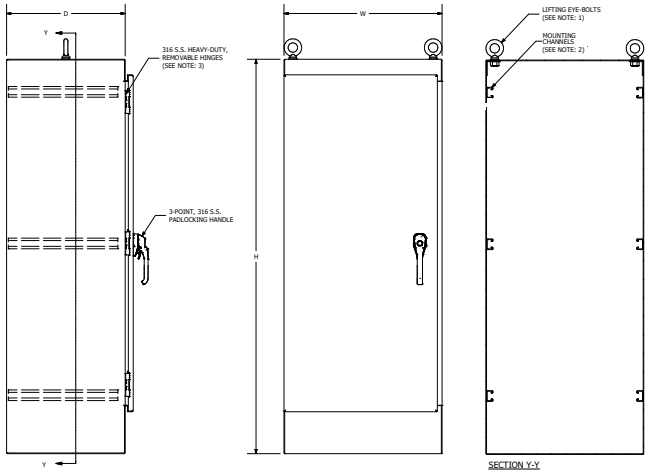

CATALOG NUMBER	ENCLOSURE SIZE H X W X D	NUMBER OF HINGES
WRD602418SSFSN4	60 x 24 x 18	3
WRD603624SSFSN4	60 x 36 x 24	3
WRD722418SSFSN4	72 x 24 x 18	4
WRD722424SSFSN4	72 x 24 x 24	4
WRD723018SSFSN4	72 x 30 x 18	4
WRD723024SSFSN4	72 x 30 x 24	4
WRD723618SSFSN4	72 x 36 x 18	4
WRD723624SSFSN4	72 x 36 x 24	4
WRD723630SSFSN4	72 x 36 x 30	4
WRD723636SSFSN4	72 x 36 x 36	4
WRD902420SSFSN4	90 x 24 x 20	5
WRD903620SSFSN4	90 x 36 x 20	5
WRD903624SSFSN4	90 x 36 x 24	5
WRD903636SSFSN4	90 x 36 x 36	5
WRD604818SSFSDN4	60 x 48 x 18	3
WRD724818SSFSDN4	72 x 48 x 18	4
WRD724824SSFSDN4	72 x 48 x 24	4
WRD726018SSFSDN4	72 x 60 x 18	4
WRD726024SSFSDN4	72 x 60 x 24	4
WRD726036SSFSDN4	72 x 60 x 36	4
WRD727218SSFSDN4	72 x 72 x 18	4
WRD727224SSFSDN4	72 x 72 x 24	4
WRD904820SSFSDN4	90 x 48 x 20	5
WRD907220SSFSDN4	90 x 72 x 20	5
WRD907224SSFSDN4	90 x 72 x 24	5
WRD907236SSFSDN4	90 x 72 x 36	5

NOTES:

1. Four lifting eye-bolts are provided when "D" is 30"or greater.
2. Optional panel(s) can be mounted anywhere along mounting channels.
3. Three hinges per door are provided when "H" is 60". Four hinges per door are provided when "H" is 72". Five hinges per door are provided when "H" is 90".

Double Door



WRD724818SSFSDN4

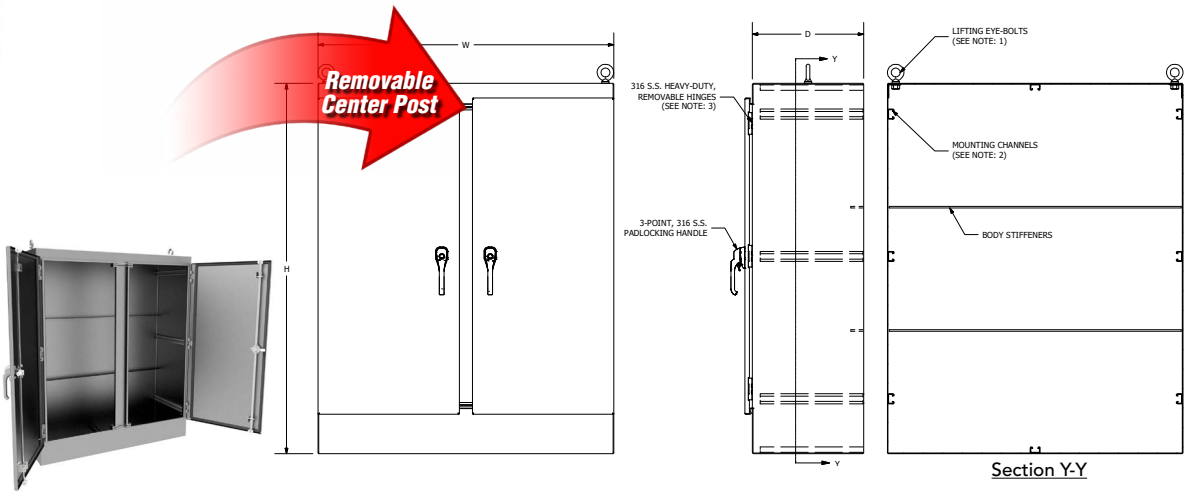

WRD-N4D3PT

Removable Hinge Pins, Double Door, Floor Mount

Double Door





WRD746012N4D3PT

CATALOG NUMBER	ENCLOSURE SIZE H X W X D	NUMBER OF HINGES
WRD624810N4D3PT	62 X 48 X 10	3
WRD626012N4D3PT	62 X 60 X 12	3
WRD746012N4D3PT	74 X 60 X 12	4
WRD747212N4D3PT	74 X 72 X 12	4
WRD746018N4D3PT	74 X 60 X 18	4
WRD747218N4D3PT	74 X 72 X 18	4
WRD747224N4D3PT	74 X 72 X 24	4

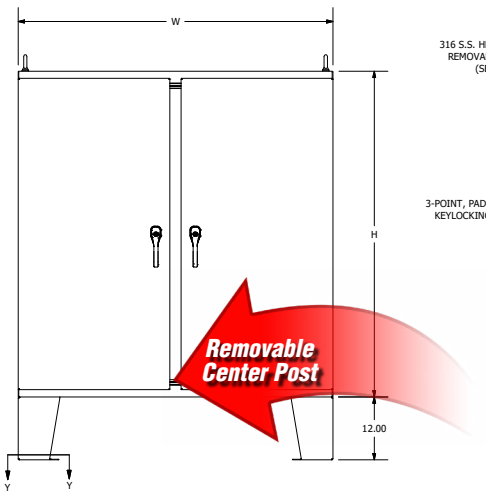

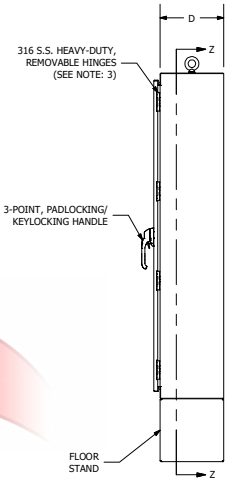

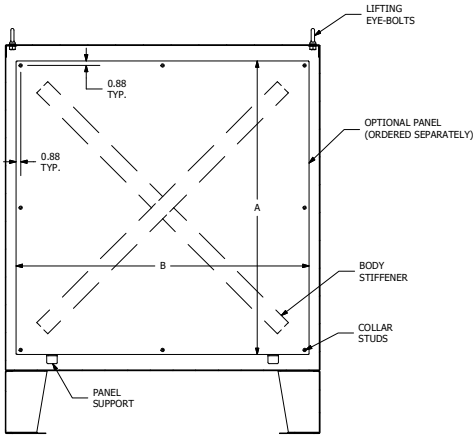

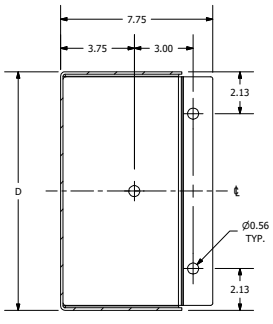

© 2020 Hubbell. All rights reserved. Information subject to change. Trademarks are property of their respective owners.