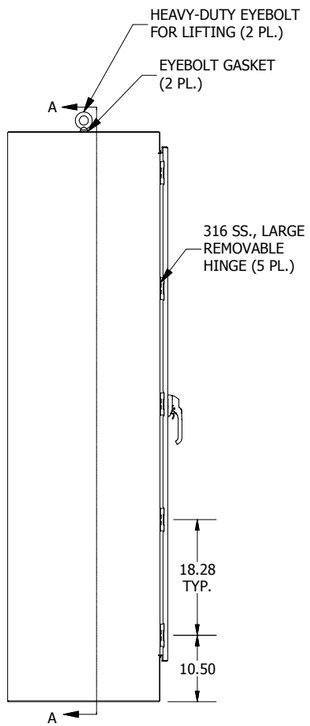

LEFT SIDE VIEW

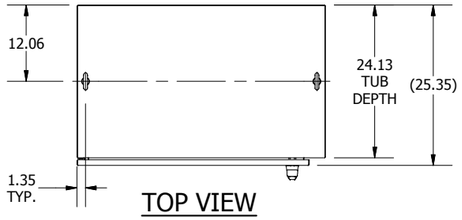

TOP VIEW

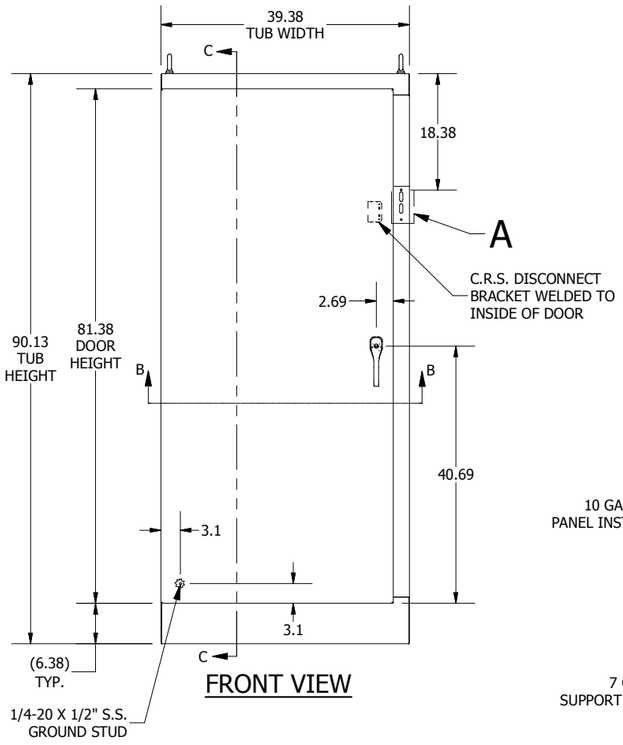

FRONT VIEW

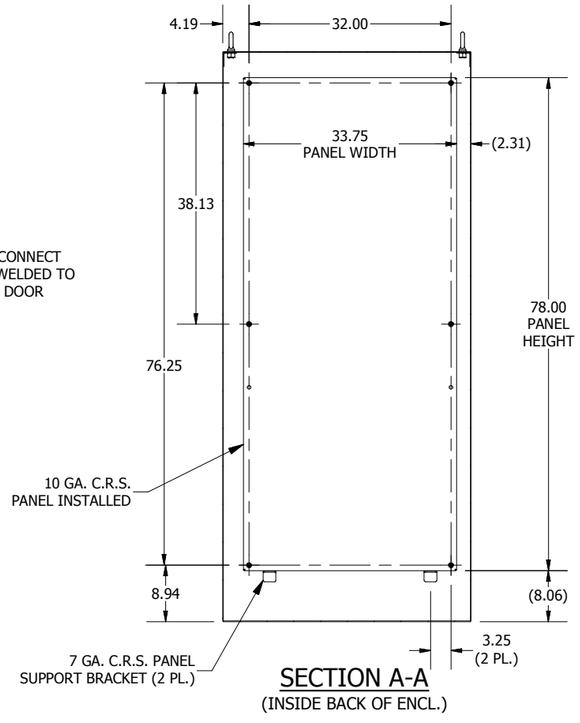

SECTION A-A
(INSIDE BACK OF ENCL.)

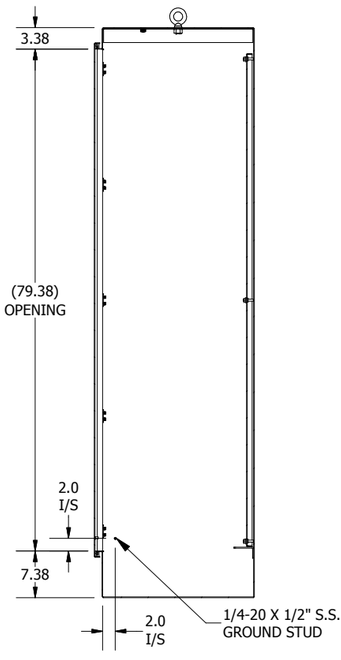

SECTION C-C
(INSIDE LEFT OF ENCL.)

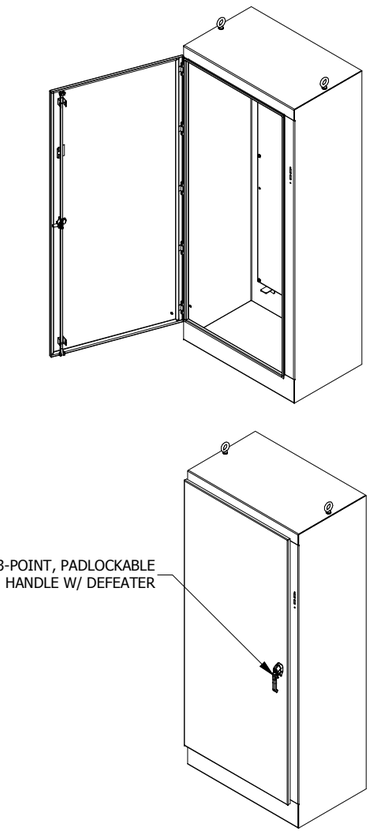

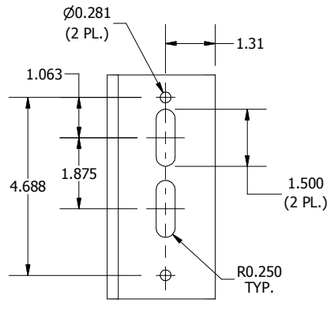

DETAIL A
(DISCONNECT CUTOUT DETAIL)

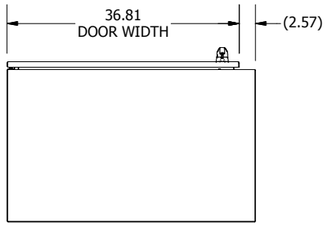

BOTTOM VIEW

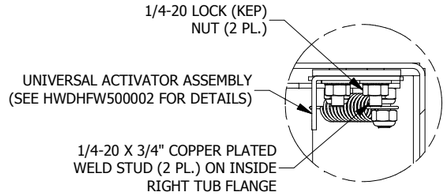

DETAIL B
(UNIV. ACTIVATOR INSTALL)

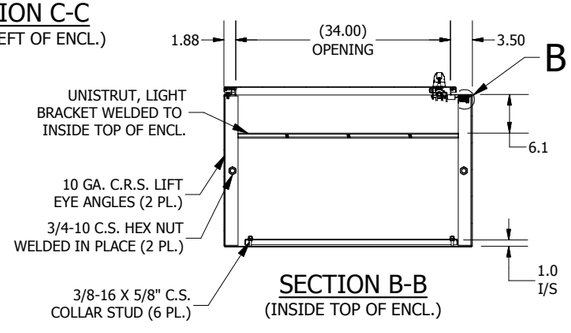

SECTION B-B
(INSIDE TOP OF ENCL.)

PART#: WRD90XM3924FS4
(DATA SUBJECT TO CHANGE WITHOUT NOTICE)

THIS DRAWING IS PROPERTY OF HUBBELL INC. WIEGMANN
ALL INFORMATION IS PROPRIETARY AND NOT TO BE DUPLICATED