SAVE THESE INSTRUCTIONS

QM40 Positive Displacement Fuel Meter

Owner's Manual

STOP

DO NOT RETURN THIS PRODUCT TO THE STORE!

Please contact GPI before returning any product. If you are missing parts or experience problems with your installation, our Customer Support Department will be happy to assist you.

GPI Customer Support
800-835-0113 or
316-686-7361



TABLE OF CONTENTS

General Information 2
Installation 3
Operation 5
Calibration 6
Maintenance 6
Troubleshooting 7
Specifications 8
Informative Table - Diesel 9
Informative Table - Unleaded 10
Illustrated Parts List 12
Parts and Service 17

To the owner…

Congratulations on receiving your GPRO® QM40 Meter. We are pleased to provide you with a meter designed to give you maximum reliability and efficiency.

Our business is the design, manufacture and marketing of liquid handling, agricultural and recreational products. We succeed because we provide customers with innovative, reliable, safe, timely and competitively-priced products. We pride ourselves in conducting our business with integrity and professionalism.

We are proud to provide you with a quality product and the support you need to obtain years of safe, dependable service.

PEI MEMBER
Great Plains Industries, Inc. is a member of the Petroleum Equipment Institute.

Victor Lukic

Victor Lukic, President
Great Plains Industries, Inc.

GENERAL INFORMATION

The purpose of this manual is to assist you in installing, operating and maintaining your mechanical fuel meter. Please take a few moments to read these instructions before installing and operating your fuel meter.

SAFETY INSTRUCTIONS

The following safety alert symbols are used in this manual.

⚠ DANGER

DANGER indicates a hazardous situation which, if not avoided, will result in death or serious injury.

⚠ WARNING

WARNING indicates a hazardous situation which, if not avoided, could result in death or serious injury.

⚠ CAUTION

CAUTION indicates a hazardous situation which, if not avoided, may result in minor or moderate injury.

It is your responsibility to:

- Know and follow applicable national, state and local safety codes pertaining to installing and operating equipment for use with flammable liquids.
- Know and follow all safety precautions when handling petroleum fuels
- Ensure that all equipment operators have access to adequate instructions concerning safe operation and maintenance.

Appropriate Use of QM40 Meter:

1. ⚠ WARNING This meter is for use only with thin viscosity petroleum fuels such as gasoline, gasoline-ethanol blends (up to E15), diesel, diesel blends (up to B20), kerosene, aviation gasoline AVGAS 100LL, and Jet A.
2. ⚠ DANGER Observe precautions against fire or explosion when dispensing fuel. Do not operate the meter in the presence of any source of ignition including running or hot engines, lighted cigarettes, or gas or electric heaters.
3. ⚠ WARNING Any components such as hose, nozzle, or pump added to your meter must be statically grounded and approved for use with petroleum fuels.
4. ⚠ WARNING Avoid prolonged skin contact with petroleum fuels. Use protective goggles, gloves, and aprons in case of accidental splashing or spillage. Change saturated clothing and wash skin contact areas promptly with soap and water.

This meter is designed for the field measurement of thin viscosity petroleum fuels only and intended for use with pump systems up to 40 GPM (150 LPM) flow range (not intended for gravity flow systems). Using mechanical gears, these meters translate flow data from positive displacement oval gears into calibrated units which are indicated on the face of the meter. This meter is factory calibrated for diesel fuel. Field calibration feature is available for other fluids, see Calibration section.

AVIATION NOTE:

QM40 is approved for ground-based refueling only. Do not use in or on aircraft. Please consult NFPA 407 for recommended safety requirements during ground fuel servicing of aircraft using petroleum fuels.

INSTALLATION

Before installing your meter, review the safety instructions given above. Examine your meter to make sure there are no visible signs of shipment damage. Plan your meter installation by reviewing the following procedures. Your system must be mounted on a vented tank. If the tank is unvented, your local dealer or distributor can supply a pressure cap.

If the meter is located in a rigid piping system where the fluid is trapped (for example, by gravity, valves or nozzles) thermal expansion of the fluid can create pressure spikes that can damage a meter. Install a thermal relief valve or otherwise allow for thermal expansion of the fluid.

The flowmeter MUST be mounted so that the rotor shafts are in a horizontal plane. Mounting the meter with the mechanical display facing horizontally will orient the rotor shafts correctly. The mechanical display should never face upwards or toward the ground. The weight of the rotors must be supported by the horizontal rotor shafts. If installed incorrectly, performance, life or accuracy could be affected. (see Figure 1)

Liquid can flow in a horizontal direction, or a vertical direction, but in each case the rotor shafts must be in a horizontal plane.

It is preferred to install the flow-meter upstream of a flow control or shut-off valve, as the back pressure provided by the valve will be beneficial to system accuracy. The flow meter should remain full of liquid at all times when connected.

Do not operate the flow-meter directly discharging to the atmosphere.

Prior to installation, determine whether horizontal or vertical flow is required.

For vertical flow installations the liquid should travel from bottom to top, i.e. it should rise vertically through the flow-meter. This will ensure that the flow-meter remains full of liquid, and will prevent air entrapment in the meter.

The back of the meter housing is embossed with “INLET” and “OUTLET” adjacent to its respective port to assist in correct piping connections.

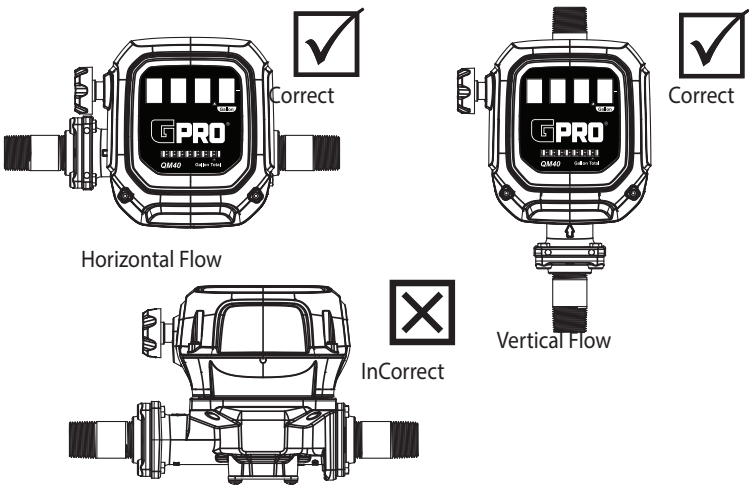

figure 1

QM40 Modular Configurations



outlet adapter/o-ring/bolts

The QM40 includes adapter plates, o-rings, and bolts for use with threaded pipe.

inlet adapter/o-ring/bolts

figure 4a



90° outlet adapter/o-ring/bolts

Without the inlet adapter plate, the QM40 can be bolted directly to the outlet of a GPI or GPRO pump featuring a modular outlet. Bolt modular accessories to the outlet of the QM40 or use the outlet adapter plate for threaded pipe.

pump with modular outlet

figure 4b



90° outlet adapter/o-ring/bolts

Use a GPI modular filter adapter to include a filter into your system

modular filter adapter/o-rings/bolts

pump with modular outlet

figure 4c

Changing Display Orientation

The mechanical display case can be removed, rotated and reinstalled for easy reading with either horizontal or vertical flow (see Figure 2)

1. Using a 5mm hex wrench, remove the (4) M6 socket screws from back of housing.
2. Without separating the housing from the mechanical display, sit the meter face up
3. Lift the mechanical display from the housing, rotate to desired orientation and place back on to housing Note: Ensure bevel gear is still present on center drive shaft as bevel gear is not retained, see Figure 2 for bevel gear location
4. Reinstall the (4) M6 socket screws and tighten to 42-46 lb-in [4.7-5.2 N·m] torque.

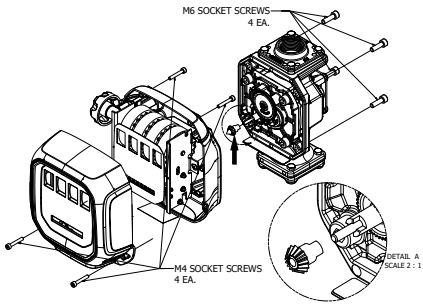

figure 2

Meter Installation

1. Remove the protective plugs from the meter inlet and outlet ports. The inlet port has a 100 mesh stainless steel conical strainer installed.

⚠ CAUTION

The mesh strainer must always be installed when operating the meter; otherwise, particles may enter the meter chamber and disrupt the smooth operation of the oval gears.

2. Wrap threaded male connections with thread tape or use a pipe sealant compound compatible with petroleum fuels.
3. Install the meter on the pump using an appropriately sized nipple. The bottom of the meter housing is embossed with "INLET" and "OUTLET" adjacent to its respective port to assist in correct piping connections.
4. Install other system components onto the meter and tighten.

OPERATION

ALWAYS FOLLOW SAFETY PRECAUTIONS WHEN OPERATING THIS EQUIPMENT. REVIEW THE SAFETY INSTRUCTIONS. Before each use, visually check the meter to ensure it is securely connected to other system components and there is no leakage. Promptly wipe spilled fuel from the meter's exterior and other system components.

The large meter display represents the Batch Total for each fuel delivery. Before dispensing, reset the Batch Total to zero by turning the knob. (see Figure 3)

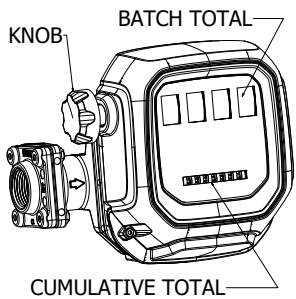

figure 3

The small display represents the Cumulative Total of all fuel deliveries and cannot be reset.

CALIBRATION

The meter is accurately calibrated at the factory for use with diesel fuel. Due to differences in viscosity and flow rates, the meter may require recalibration to measure other fuels or to adjust for inaccuracies. A gear replacement kit is available to convert the meter to unleaded fuels. (PN 139500-15, see Illustrated Parts List section)

1. To adjust the calibration of the meter, gain access to the calibration screw by performing the following: (see Figure 4)
2. Remove the back plate and the (4) screws retaining it. The O-ring seal under the plate must not be damaged.
3. Using a 5MM hex L-wrench, adjust the calibration screw as required.
4. Note: The calibration screw setting may have been adjusted at the factory. The gasoline setting is approximately fully closed (turn clockwise). Do not overtighten the screw against the seat.

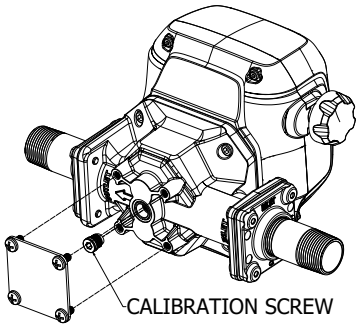

figure 4

5. Reinstall the plate, (4) screws and the O-ring seal if removed. Tighten (4) screws to 42-46 lb-in [4.7-5.2 N·m] torque.

MAINTENANCE

The meter's strainer should be cleaned at regular intervals, especially if reduced flow is encountered.

Clean or Replace Strainer

1. Remove the socket screws at the inlet fitting. Remove the fitting, O-ring and strainer. (see Figure 5)

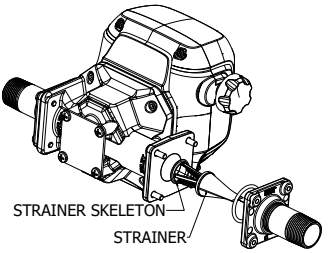

figure 5

2. The strainer rim is pressed into the housing inlet but can be removed by carefully grasping the end with pliers and pulling with a wiggling motion until free.
3. Using a fine brush, clean the strainer. Replace the strainer as necessary.
4. Wipe the housing inlet clean and reinstall strainer, pressing it into the strainer bore. It is designed to be field pressed back into place using the end of a clean 1" pipe nipple or similar tube tool using light hammer taps.

⚠ CAUTION

The mesh strainer must always be installed when operating the meter; otherwise, particles may enter the meter chamber and disrupt the smooth operation of the oval gears.

5. Wipe clean the fitting and O-ring groove. Coat the O-ring with oil or light grease and seat into the fitting groove.
6. Reinstall the inlet fitting and screws. Tighten screws to 42-46 lb-in [4.7-5.2 N·m] torque.

TROUBLESHOOTING

Symptom	Probable Cause	Corrective Action
A. Meter counter does not operate. (Normal fuel flow)	Broken counter assembly.	Replace counter.
	Counter alignment	Look for loose or missing fasteners, bent or misaligned parts.
	Foreign material in counter assembly.	Remove and clean counter assembly.
	Missing or worn bevel gear.	Replace bevel gear.
B. Meter counter does not operate. (Little or no fuel flow)	Clogged strainer in meter inlet.	Clean or replace strainer
	Jammed rotors from foreign material in rotor assembly.	Remove and clean rotor assembly.
	Other system components malfunctioning.	Check all system components tank to nozzle for clogs and/or malfunctions. Repair as necessary.
C. Fuel leakage.	Leakage between coverplate and housing.	Remove coverplate and inspect for damaged, missing or incorrectly seated seal. Replace as required.
	Leakage at fittings	Remove fittings and inspect for damaged, missing or incorrectly seated seals. Replace as required.
	Leakage at threads.	Remove meter and reseal all threaded connections with thread tape or pipe thread sealing compound approved for use with flammable liquids.

SPECIFICATIONS

	Gallon Models	Litre Models
Model Designation	QM40-G8N	QM40-L8N
Unit of Measure	U.S. Gallon	Litre
Flow Range	2 to 40 GPM	8 to 150 LPM
Typical Accuracy (Factory Set)[1]	Diesel: ±0.5% (15-30 GPM/57-113 LPM) ±1.0% all other flowrates	
	Unleaded: +0.5% to -1.5% (15-30 GPM/57-113 LPM) ±2.0% all other flowrates	
Typical Accuracy (Field/Customer Set)[1]	Diesel: ±0.25% at a given flow (15-30 GPM/57-113 LPM) ±0.5% all other given flows	
	Unleaded: ±0.5% at a given flow (2-23 GPM/8-87 LPM) ±0.5% at a given flow (23-40 GPM/87-150 LPM)[2]	
Resolutional Error (Display)	(0.01/Dispensed Amount)*100	(0.1/Dispensed Amount)*100
Operating Temperature	-20°F to 125°F	-29°C to 52°C
Maximum Working Pressure	50 PSIG / 3.4 Bar	
Wetted Materials:		
Housing / Cover / Fittings	Aluminum	
Rotors	PPS (Polyphenylene Sulfide)	
Shafts / Strainer	Stainless Steel	
Seals	NBR (Nitrile Butadiene Rubber)	
Mag-Drive	Acetal, Stainless Steel and Neodymium (Nickel Plated)	
Inlet/Outlet Ports	1" NPT (female)	1" NPT (female)
Pressure Drop (at Max. Flow)	Diesel: 7.0 PSI / 0.5 Bar	
	Unleaded: 4.5 PSI / 0.3 Bar	
Maximum Batch Total	999.9	9999
Maximum Cumulative Total	9,999,999.9	99,999,999
Technology	Positive Displacement	

[1]Results may vary due to application variations.
[2]Unleaded Fuel Kit required (Part No. 139500-15)
Note: Field Calibration is available on all models.

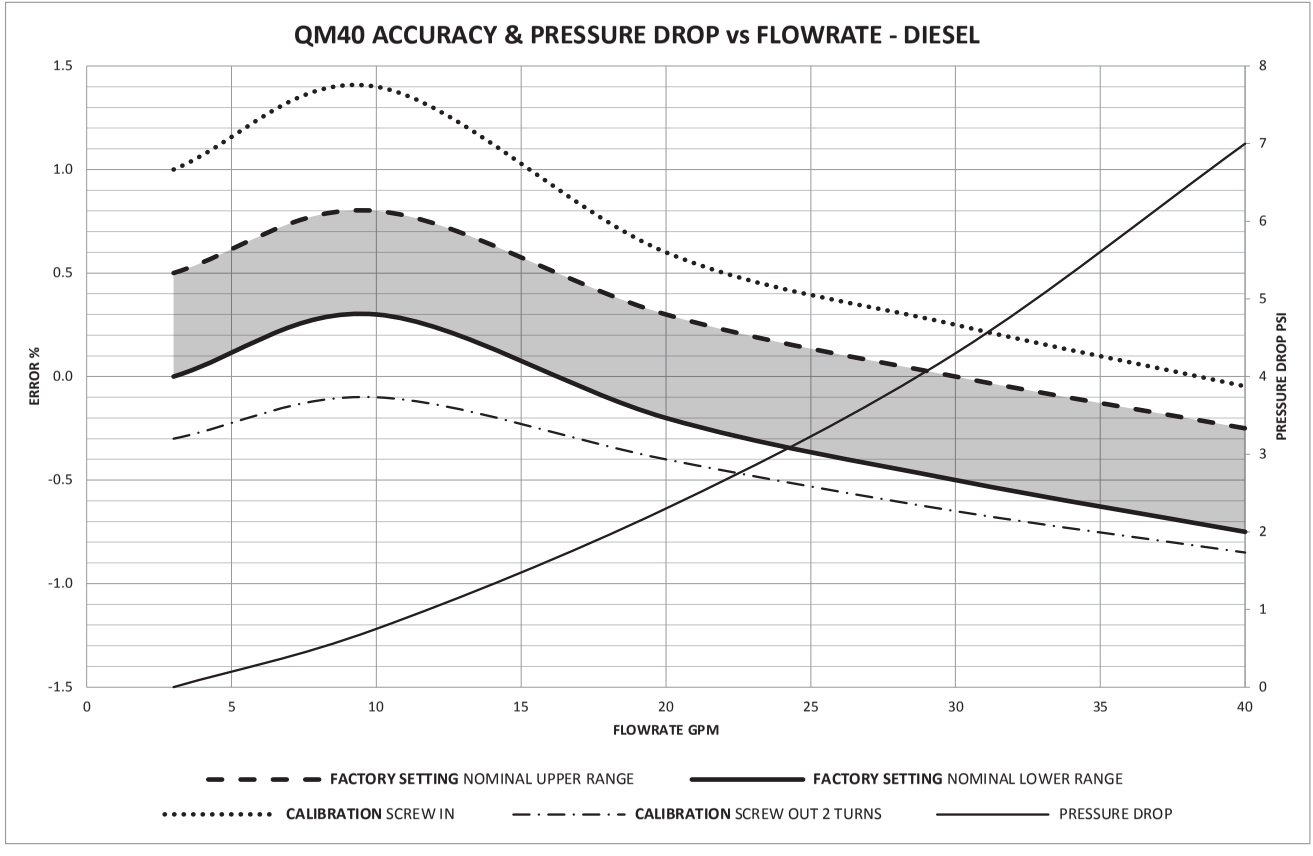
QM40 ACCURACY & PRESSURE DROP vs FLOWRATE - DIESEL
ERROR %
PRESSURE DROP PSI
FLOWRATE GPM
1.5
1.0
0.5
0.0
-0.5
-1.0
-1.5
8
7
6
5
4
3
2
1
0
0
5
10
15
20
25
30
35
40
FACTORY SETTING NOMINAL UPPER RANGE
FACTORY SETTING NOMINAL LOWER RANGE
CALIBRATION SCREW IN
CALIBRATION SCREW OUT 2 TURNS
PRESSURE DROP

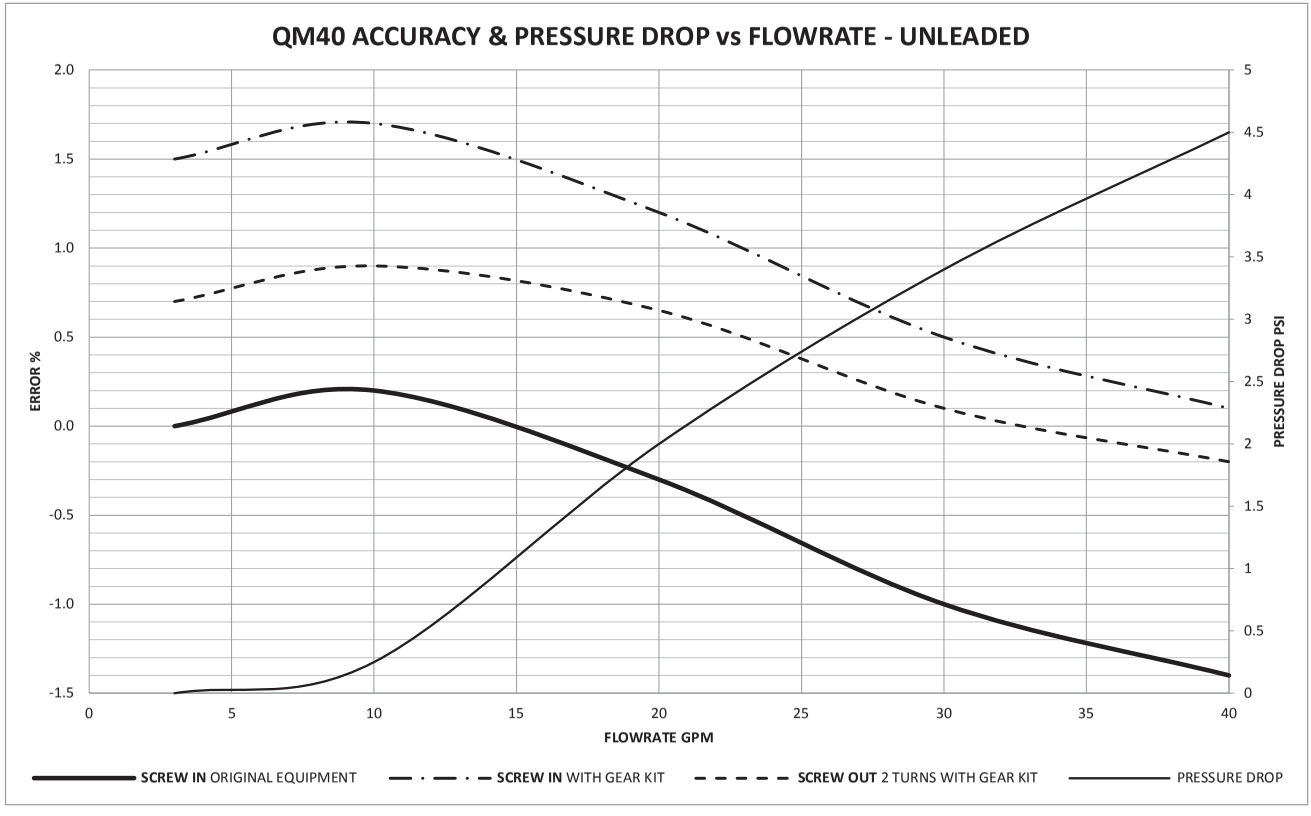

*A gear replacement kit is available (P/N 139500-15) to convert the meter to unleaded fuels. Replacement gear kit will adjust entire flow curve up 1.5%.

NOTES:

ILLUSTRATED PARTS LIST

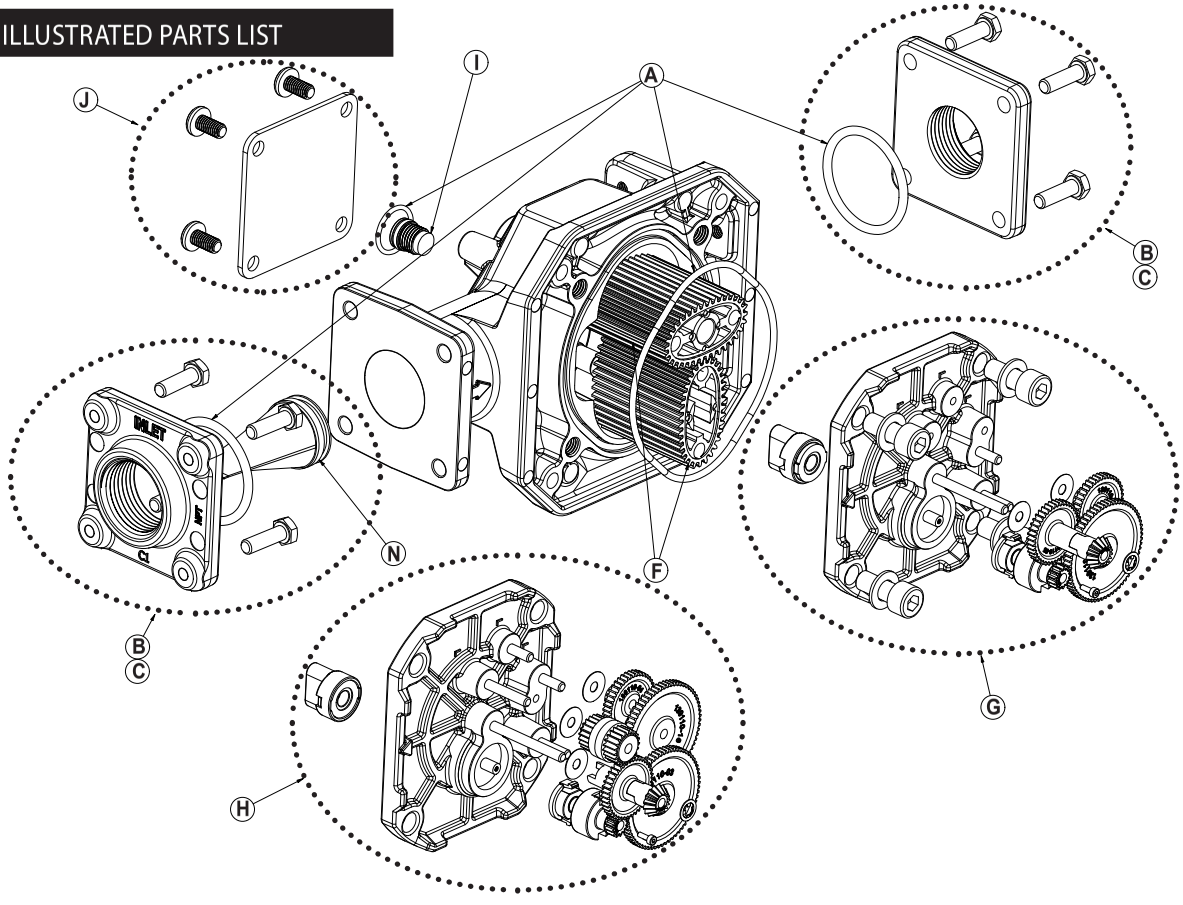

Kits and Accessories

ITEM	PART NO.	DESCRIPTION
A	139500-01	KIT, SEAL: Includes (1) housing O-ring, (2) fitting O-rings, (1) back plate O-ring
B	165700-02	KIT, FITTING, 1" NPT: Includes (2) fittings, (2) fitting O-rings, (1) strainer, attaching hardware
C	165700-09	KIT, FITTING, 1" BSPP: Includes (2) fittings, (2) fitting O-rings, (1) strainer, attaching hardware
F	139500-06	KIT, ROTOR: Includes (1) rotor set
G	139500-07	KIT, COVERPLATE ASSEMBLY, GAL: Includes (1) assembled coverplate (gears, mag drives), housing seal, attaching hardware
H	139500-08	KIT, COVERPLATE ASSEMBLY, LITRE: Includes (1) assembled coverplate (gears, mag drives), housing seal, attaching hardware

ITEM	PART NO.	DESCRIPTION
I	139500-09	KIT, CALIBRATION SCREW: Includes (1) calibration screw, (1) O-ring
J	139500-10	KIT, BACK PLATE: Includes (1) back plate, (1) O-ring, attaching hardware
N	139500-14	KIT, STRAINER: Includes (1) strainer
-	139500-15	KIT, UNLEADED FUEL, QM40: Not shown

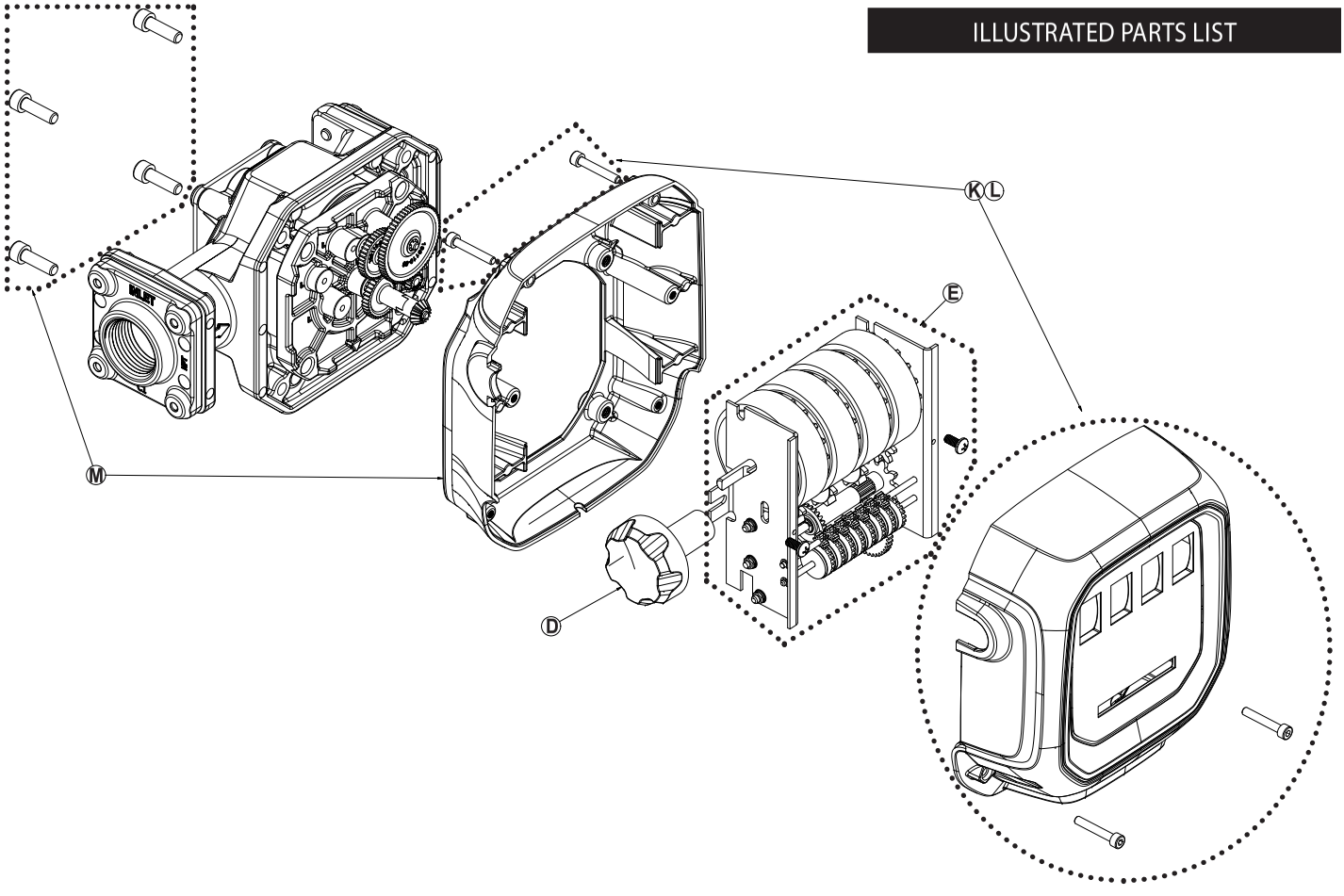
K
L
E
M
D

Kits and Accessories

ITEM	PART NO.	DESCRIPTION
D	139500-04	KIT, KNOB ASSEMBLY: Includes (1) knob assembly
E	139500-05	KIT, COUNTER ASSEMBLY: Includes (1) counter assembly, attach-ing hardware
K	139500-22	KIT, TOP COVER, GALLON: Includes (1) top cover w/gallon decal, attaching hardware
L	139500-23	KIT, TOP COVER, LITRE: Includes (1) top cover w/litre decal, attaching hardware
M	139500-13	KIT, MIDDLE COVER: Includes (1) middle cover, attaching hardware
-	139500-15	KIT, UNLEADED FUEL, QM240: Not shown

NOTES:

PARTS AND SERVICE

For warranty consideration, parts, or other service information, contact your local distributor. If you need further assistance, please contact GPI Customer Service Department in Wichita, Kansas during normal business hours at:

1-800-835-0113.

To obtain prompt, efficient service, always be prepared with 1.) the model number of your meter, 2.) the manufacturing date located on the back of the meter, and 3.) specific information, as necessary, obtained from the Illustrated Parts List. For warranty work always be prepared with proof of purchase date.

Please contact GPI before returning any parts. It may be possible to diagnose the trouble and identify needed parts without returning parts. GPI can also inform you of any special handling requirements you will need to follow covering the transportation and handling of fuel transfer equipment. Before packing for shipment, make sure the meter is thoroughly drained and free of fuel and vapors.

⚠ CAUTION

Do not return meters or parts without specific authority from the GPI Customer Service Department. Due to strict regulations governing shipment of flammable liquids, meters may be refused and returned to the sender if sent without authorization.

Limited Warranty Policy

Great Plains Industries, Inc. 5252 E. 36th Street North, Wichita, KS USA 67220-3205, hereby provides a limited warranty against defects in material and workmanship on all products manufactured by Great Plains Industries, Inc. This product includes a 4 year warranty from date of purchase as evidenced by the original sales receipt. A 54 month warranty from product date of manufacture will apply in cases where the original sales receipt is not available. Reference product labeling for the warranty expiration date based on 54 months from date of manufacture. Manufacturer's sole obligation under the foregoing warranties will be limited to either, at Manufacturer's option, replacing or repairing defective Goods (subject to limitations hereinafter provided) or refunding the purchase price for such Goods theretofore paid by the Buyer, and Buyer's exclusive remedy for breach of any such warranties will be enforcement of such obligations of Manufacturer. The warranty shall extend to the purchaser of this product and to any person to whom such product is transferred during the warranty period.

This warranty shall not apply if:

A. the product has been altered or modified outside the warrantor's duly appointed representative;

B. the product has been subjected to neglect, misuse, abuse or damage or has been installed or operated other than in accordance with the manufacturer's operating instructions.

To make a claim against this warranty, contact the GPI Customer Service Department at 316-686-7361 or 800-835-0113. Or by mail at:

Great Plains Industries, Inc.
5252 E. 36th St. North
Wichita, KS, USA 67220-3205

GPI will step you through a product troubleshooting process to determine appropriate corrective actions.

GREAT PLAINS INDUSTRIES, INC., EXCLUDES LIABILITY UNDER THIS WARRANTY FOR DIRECT, INDIRECT, INCIDENTAL AND CONSEQUENTIAL DAMAGES INCURRED IN THE USE OR LOSS OF USE OF THE PRODUCT WARRANTED HEREUNDER.

The company herewith expressly disclaims any warranty of merchantability or fitness for any particular purpose other than for which it was designed.

This warranty gives you specific rights and you may also have other rights which vary from U.S. state to U.S. state.

Note: In compliance with MAGNUSON MOSS CONSUMER WARRANTY ACT – Part 702 (governs the resale availability of the warranty terms).

c UL us LISTED

Some models are not UL Listed.
Check your model for UL label if in doubt.

PEI MEMBER

Wichita ⁄ Sydney

GREAT PLAINS INDUSTRIES GPI®

Great Plains Industries, Inc. / 888-996-3837 / GPI.net

© 2019 GREAT PLAINS INDUSTRIES, INC. All Rights Reserved.
FLOMEC and GPRO are registered trademarks of Great Plains Industries, Inc.