T-7781 Hammer

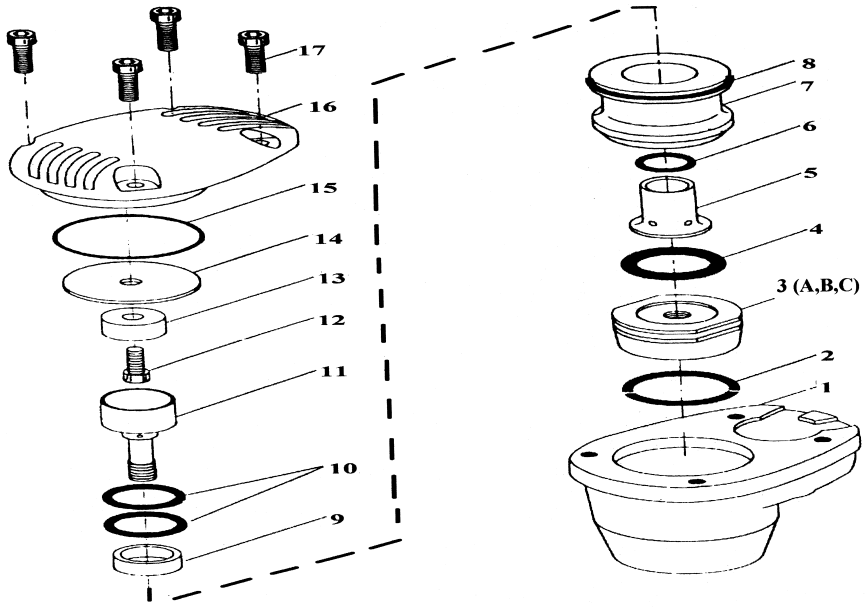

OILING INSTRUCTIONS:
OIL AFTER EACH USE
WITH 1 OR 2 TEASPOONS
OF AIR TOOL OIL THROUGH
THE AIR INLET. RUN FOR
ONE SECOND TO COAT
ALL INTERNAL PARTS

USE 90 PSI MAXIMUM

Ref #	Part #	Description	Qty.
1	778101	Housing	1
2	778102	O-Ring	1
3A	778103A	Hammer Tip (Hard Plastic)	1
3B	778103B	Hammer Tip (Aluminium)	1
3C	778103C	Hammer Tip (Steel)	1
4	778104	Stroke Control Spacer	1
5	778105	Sleeve	1
6	778106	O-Ring	1
7	778107	Valve	1
8	778108	O-Ring	1
9	778109	Bumper	1
10	778110	O-Ring	2
11	778111	Stem	1
12	778112	Screw	1
13	778113	Plug	1

Ref #	Part #	Description	Qty.
14	778114	Exhaust Seat	1
15	778115	O-Ring	1
16	778116	Cap	1
17	778117	Screw	4
18	778118	4 mm Hex Wrench (not shown)	1
19	778119	1/4” Hex Wrench (not shown)	1

505 N. Railroad Ave. 33435
P.O. Box 1117 33425
Boynton Beach, Florida

SEE OUR CATALOG
at
www.taylorpneumatic.com

0116TPTC /all rights reserved /COPYRIGHT 2016 / final

Ph. (561) 732-1111
Fax (561) 731-4412
Toll Free 800-805-8665