SIEMENS

Data sheet 3NA3372



LV HRC fuse element, NH3, In: 630 A, gG, Un AC: 500 V, Un DC: 440 V, Front indicator, live grip lugs

Model	
product brand name	SENTRON
product designation	LV HRC fuse link
design of the product	With blade contacts
design of an identification indicator	Front indicators
design of the switching contact	Non-corroding, silver-plated
design of the fuse link	LV HRC fuse link
General technical data	
size of fuse system according to EN 60269-1	NH3
operating class of the fuse link	gG
mounting type	non-insulated grip lugs
type of voltage of the operating voltage	AC/DC
supply voltage	
● at AC rated value	500 V
● at DC	440 V
Protection class	
protection class IP	IP20, with connected conductors
Switching capacity	
switching capacity current	
● at DC according to IEC 60947-2 rated value	25 kA
● according to IEC 60947-2 rated value	120 kA
Dissipation	
power loss [W]	44.8 W
power loss [W] for rated value of the current at AC in hot operating state per pole	44.8 W
Mechanical Design	
width of the enclosure	71.2 mm
mounting position	Any, preferably vertical
net weight	1 000 g
Environmental conditions	
ambient temperature during operation	
● minimum	-5 °C
● maximum	40 °C
environmental category	-20 to +50 at 95% relative humidity
environmental category during storage	90% at 20°C
Certificates	
reference code according to IEC 81346-2	FC
General Product Approval	**Declaration of Conformity**

Subject to change without notice
© Copyright Siemens

Confirmation

Test Certificates			Marine / Shipping	other	
Type Test Certificates/Test Report	Special Test Certificate	Miscellaneous		Miscellaneous	Confirmation

other	Environment
Miscellaneous	Environmental Confirmations

Further information

Siemens has decided to exit the Russian market (see here).
https://press.siemens.com/global/en/pressrelease/siemens-wind-down-russian-business

Siemens is working on the renewal of the current EAC certificates.
Please contact your local Siemens office on the status of validity of the EAC certification if you intend to import or offer to supply these products to an EAC relevant market (other than the sanctioned EAEU member states Russia or Belarus).

Information on the packaging
https://support.industry.siemens.com/cs/ww/en/view/109813875

Information- and Downloadcenter (Catalogs, Brochures,…)
http://www.siemens.com/lowvoltage/catalogs

Industry Mall (Online ordering system)
https://mall.industry.siemens.com/mall/en/en/Catalog/product?mlfb=3NA3372

Service&Support (Manuals, Certificates, Characteristics, FAQs,...)
https://support.industry.siemens.com/cs/ww/en/ps/3NA3372

Image database (product images, 2D dimension drawings, 3D models, device circuit diagrams, ...)
http://www.automation.siemens.com/bilddb/cax_en.aspx?mlfb=3NA3372

CAx-Online-Generator
http://www.siemens.com/cax

Tender specifications
http://www.siemens.com/specifications

Subject to change without notice
© Copyright Siemens

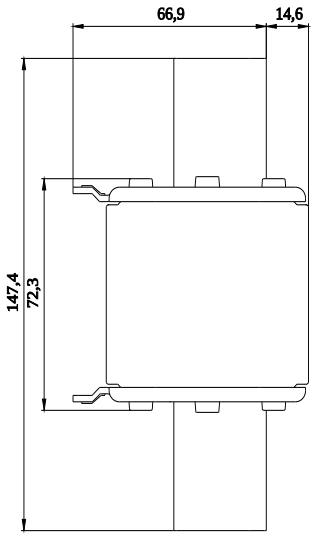

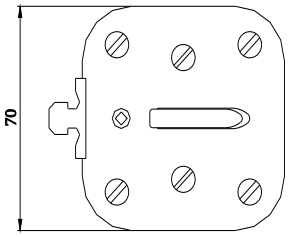

-F

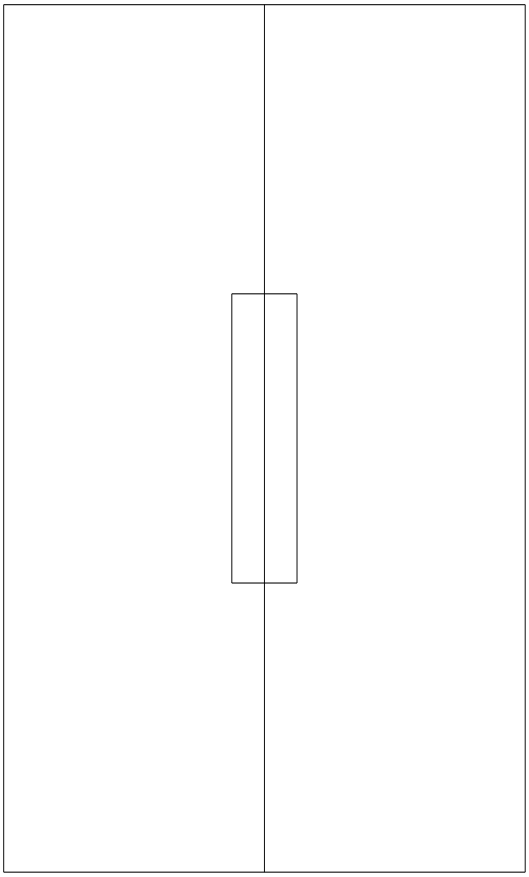

Subject to change without notice
© Copyright Siemens

FU

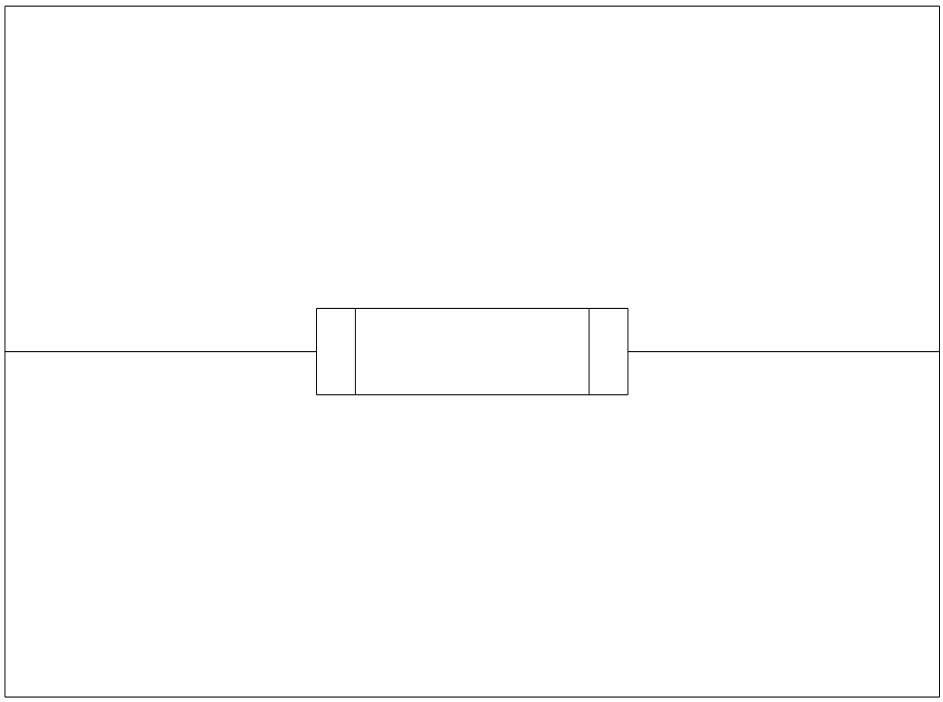

last modified: 2/14/2023

Subject to change without notice
© Copyright Siemens

Subject to change without notice
© Copyright Siemens