SIEMENS

Data sheet 3NE3333



SITOR fuse link, with slotted blade contacts, NH2, In: 450 A, aR, Un AC: 1000 V, front indicator

Model	
product brand name	SENTRON
product designation	SITOR fuse link
design of the product	With slotted blade contacts
design of an identification indicator	front indicator
design of the switching contact	with slotted blade contacts for M10 screw fixing. mounting dimension: 110 mm. or for installation in LV HRC fuse bases or switch disconnectors
design of the fuse link	SITOR, LV HRC design
General technical data	
size of fuse system according to EN 60269-1	NH2
operating class of the fuse link	aR
varying load factor (WL)	1
type of voltage of the operating voltage	AC
operating voltage at AC according to UL rated value	1 000 V
Supply voltage	
supply voltage	
● at AC rated value	1 000 V
Switching capacity	
switching capacity current	
● according to IEC 60947-2 rated value	100 kA
Dissipation	
power loss [W]	90 W
power loss [W]	
● for rated value of the current at AC in hot operating state per pole	90 W
● maximum	90 W
Product details	
accessories included	no
Mechanical Design	
mounting position	Any, preferably vertical
Environmental conditions	
ambient temperature during operation	
● minimum	-20 °C
● maximum	50 °C
environmental category	-20 to +50 at 95% relative humidity

General Product Approval	Declaration of Conformity

Subject to change without notice
© Copyright Siemens

Confirmation

Test Certificates	other			Environment
Special Test Certificate	Miscellaneous	Confirmation	Miscellaneous	Environmental Confirmations

Further information

Siemens has decided to exit the Russian market (see here).
https://press.siemens.com/global/en/pressrelease/siemens-wind-down-russian-business

Siemens is working on the renewal of the current EAC certificates.
Please contact your local Siemens office on the status of validity of the EAC certification if you intend to import or offer to supply these products to an EAC relevant market (other than the sanctioned EAEU member states Russia or Belarus).

Information on the packaging
https://support.industry.siemens.com/cs/ww/en/view/109813875

Information- and Downloadcenter (Catalogs, Brochures,…)
http://www.siemens.com/lowvoltage/catalogs

Industry Mall (Online ordering system)
https://mall.industry.siemens.com/mall/en/en/Catalog/product?mlfb=3NE3333

Service&Support (Manuals, Certificates, Characteristics, FAQs,...)
https://support.industry.siemens.com/cs/ww/en/ps/3NE3333

Image database (product images, 2D dimension drawings, 3D models, device circuit diagrams, ...)
http://www.automation.siemens.com/bilddb/cax_en.aspx?mlfb=3NE3333

CAx-Online-Generator
http://www.siemens.com/cax

Tender specifications
http://www.siemens.com/specifications

Subject to change without notice
© Copyright Siemens

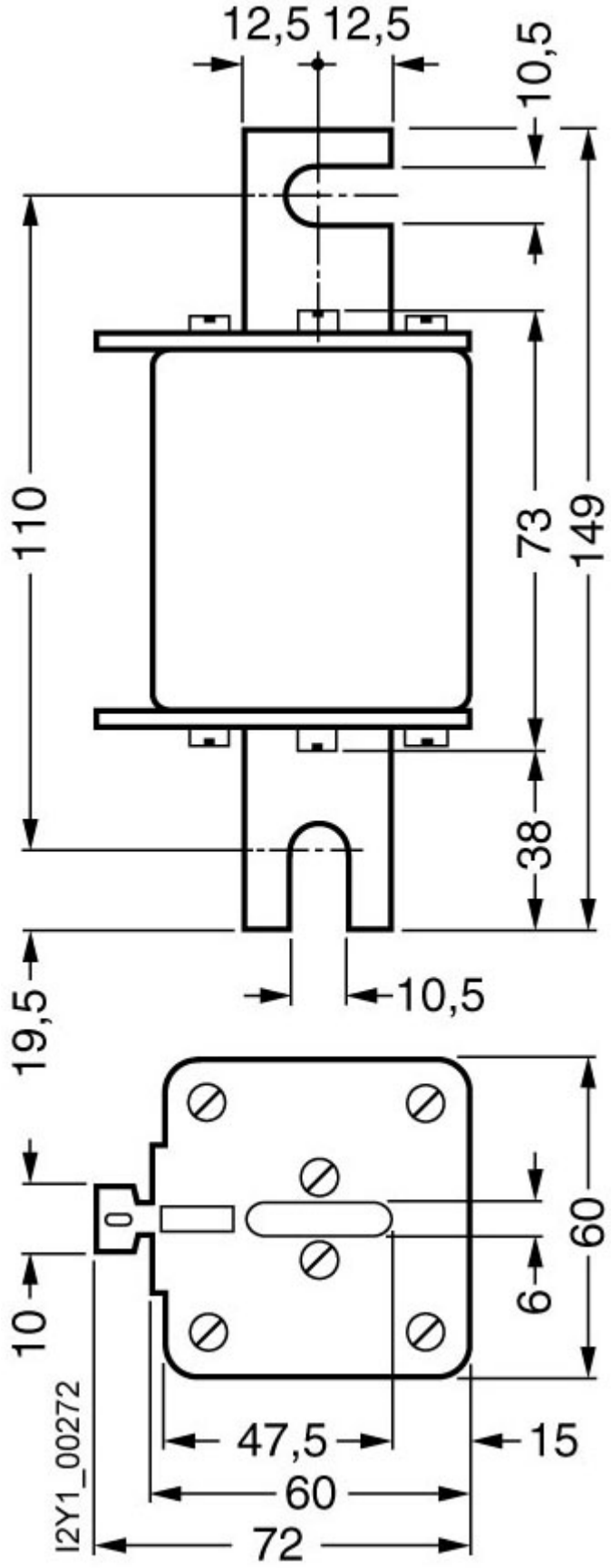

last modified: 7/5/2023

Subject to change without notice
© Copyright Siemens

Subject to change without notice
© Copyright Siemens