SIEMENS

Data sheet 3NE8024-1



SITOR fuse link, with blade contacts, NH00, In: 160 A, aR, Un AC: 690 V, Un DC: 440 V, front indicator

Model	
product brand name	SENTRON
product designation	SITOR fuse link
design of the product	With blade contacts
design of an identification indicator	front indicator
design of the switching contact	with blade contacts for mounting in LV HRC fuse bases or switch disconnectors
design of the fuse link	SITOR, LV HRC design
General technical data	
size of fuse system according to EN 60269-1	NH00
operating class of the fuse link	aR
varying load factor (WL)	0.95
type of voltage of the operating voltage	AC/DC
operating voltage at AC according to UL rated value	690 V
Supply voltage	
supply voltage	
● at AC rated value	690 V
● at DC	440 V
Switching capacity	
switching capacity current	
● according to IEC 60947-2 rated value	100 kA
Dissipation	
power loss [W]	38 W
power loss [W]	
● for rated value of the current at AC in hot operating state per pole	38 W
● maximum	38 W
Product details	
accessories included	no
Mechanical Design	
mounting position	Any, preferably vertical
net weight	209 g
Environmental conditions	
ambient temperature during operation	
● minimum	-20 °C
● maximum	50 °C
environmental category	-20 to +50 at 95% relative humidity

General Product Approval	Declaration of Conformity

Subject to change without notice
© Copyright Siemens

Confirmation

Test Certificates	other			Environment
Special Test Certificate	Miscellaneous	Confirmation	Miscellaneous	Environmental Confirmations

Further information

Siemens has decided to exit the Russian market (see here).
https://press.siemens.com/global/en/pressrelease/siemens-wind-down-russian-business
Siemens is working on the renewal of the current EAC certificates.
Please contact your local Siemens office on the status of validity of the EAC certification if you intend to import or offer to supply these products to an EAC relevant market (other than the sanctioned EAEU member states Russia or Belarus).
Information on the packaging
https://support.industry.siemens.com/cs/ww/en/view/109813875
Information- and Downloadcenter (Catalogs, Brochures,…)
http://www.siemens.com/lowvoltage/catalogs
Industry Mall (Online ordering system)
https://mall.industry.siemens.com/mall/en/en/Catalog/product?mlfb=3NE8024-1
Service&Support (Manuals, Certificates, Characteristics, FAQs,...)
https://support.industry.siemens.com/cs/ww/en/ps/3NE8024-1
Image database (product images, 2D dimension drawings, 3D models, device circuit diagrams, ...)
http://www.automation.siemens.com/bilddb/cax_en.aspx?mlfb=3NE8024-1
CAx-Online-Generator
http://www.siemens.com/cax
Tender specifications
http://www.siemens.com/specifications

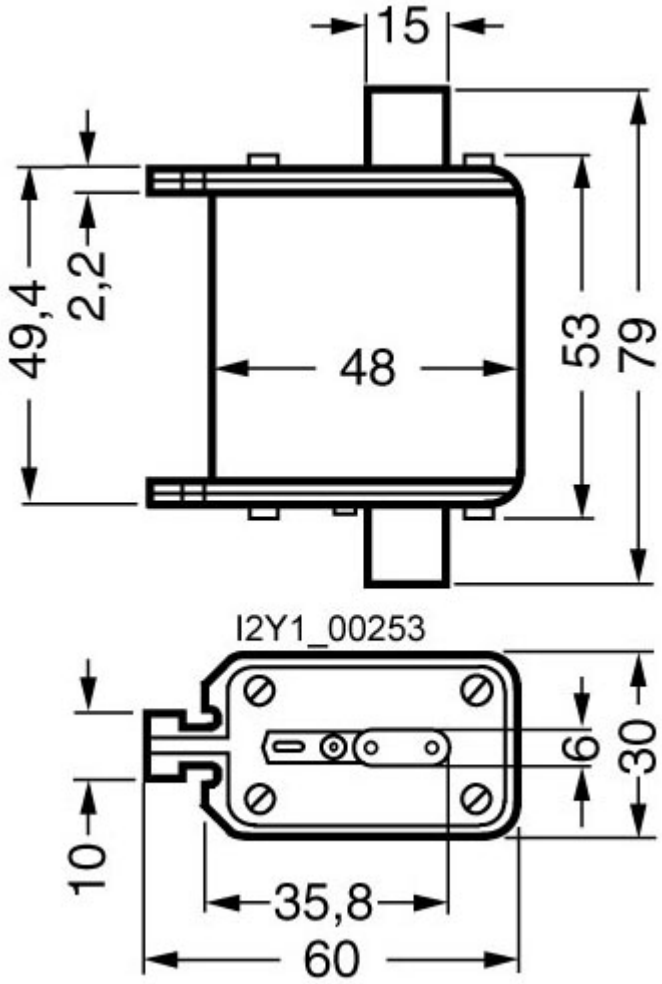

Subject to change without notice
© Copyright Siemens

last modified:	7/5/2023

Subject to change without notice
© Copyright Siemens

Subject to change without notice
© Copyright Siemens