SIEMENS

Data sheet 3RB2283-4AA1



Evaluation unit for full motor protection (monostable) Size S00...S12, class 5...30 Stand-alone installation Main circuit: -- Auxiliary circuit: Screw terminal Manual-Automatic-Reset

product brand name	SIRIUS
product designation	solid-state overload relay
product type designation	3RB22
General technical data	
size of overload relay	S00 ... S12
size of contactor can be combined company-specific	S00 ... S12
power loss [W] for rated value of the current at AC in hot operating state	0.5 W
● per pole	0.17 W
insulation voltage with degree of pollution 3 at AC rated value	300 V
surge voltage resistance rated value	4 kV
type of protection according to ATEX directive 2014/34/EU	Ex II (2) GD
certificate of suitability according to ATEX directive 2014/34/EU	PTB 05 ATEX 3022
reference code according to IEC 81346-2	F
Substance Prohibitance (Date)	05/28/2009
Ambient conditions	
installation altitude at height above sea level maximum	2 000 m
ambient temperature	
● during operation	-25 ... +60 °C
● during storage	-40 ... +80 °C
● during transport	-40 ... +80 °C
relative humidity during operation	100 %
Main circuit	
number of poles for main current circuit	3
adjustable current response value current of the current-dependent overload release	0.3 ... 630 A
operational current rated value	630 A
control supply voltage at AC	
● at 50 Hz rated value	24 ... 240 V
● at 60 Hz rated value	24 ... 240 V
Auxiliary circuit	
number of NC contacts for auxiliary contacts	2
number of NO contacts for auxiliary contacts	2
operational current of auxiliary contacts at AC-15	
● at 24 V	6 A
● at 110 V	6 A
● at 120 V	6 A
● at 125 V	6 A
● at 230 V	3 A
operational current of auxiliary contacts at DC-13	
● at 24 V	2 A

Subject to change without notice
© Copyright Siemens

● at 60 V	0.55 A
● at 110 V	0.3 A
● at 125 V	0.3 A
● at 220 V	0.2 A
Protective and monitoring functions	
trip class	CLASS 5, 10, 20 and 30 adjustable
Short-circuit protection	
design of the fuse link	
● for short-circuit protection of the auxiliary switch required	fuse gL/gG: 6 A
Installation/ mounting/ dimensions	
mounting position	any
fastening method	stand-alone installation
height	111 mm
width	45 mm
depth	95 mm
required spacing	
● with side-by-side mounting	
— forwards	0 mm
— backwards	0 mm
— upwards	0 mm
— downwards	0 mm
— at the side	0 mm
● for grounded parts	
— forwards	0 mm
— backwards	0 mm
— upwards	0 mm
— at the side	6 mm
— downwards	0 mm
● for live parts	
— forwards	0 mm
— backwards	0 mm
— upwards	0 mm
— downwards	0 mm
— at the side	6 mm
Connections/ Terminals	
product component removable terminal for auxiliary and control circuit	Yes
type of electrical connection	
● for auxiliary and control circuit	screw-type terminals
type of connectable conductor cross-sections	
● for auxiliary contacts	
— finely stranded with core end processing	0.5 ... 2.5 mm², 2x (0.5 ... 1.5 mm²)
● for AWG cables for auxiliary contacts	2x (24 ... 16)
Safety related data	
protection class IP on the front according to IEC 60529	IP20
touch protection on the front according to IEC 60529	finger-safe, for vertical contact from the front
Certificates/ approvals	

General Product Approval					EMC
CSA	Confirmation	CCC	UL	EAC	RCM

For use in hazardous locations		Declaration of Conformity		Test Certificates	
ATEX	Explosion Protection Certificate	UKCA	CE EG-Konf.	Special Test Certificate	Type Test Certificates/Test Report

Subject to change without notice
© Copyright Siemens

Marine / Shipping	other
ABS LRS DNV·GL	Confirmation

Further information

Siemens has decided to exit the Russian market (see here).
https://press.siemens.com/global/en/pressrelease/siemens-wind-down-russian-business

Siemens is working on the renewal of the current EAC certificates.
Please contact your local Siemens office on the status of validity of the EAC certification if you intend to import or offer to supply these products to an EAC relevant market (other than the sanctioned EAEU member states Russia or Belarus).

Information on the packaging
https://support.industry.siemens.com/cs/ww/en/view/109813875

Information- and Downloadcenter (Catalogs, Brochures,…)
https://www.siemens.com/ic10

Industry Mall (Online ordering system)
https://mall.industry.siemens.com/mall/en/en/Catalog/product?mlfb=3RB2283-4AA1

Cax online generator
http://support.automation.siemens.com/WW/CAXorder/default.aspx?lang=en&mlfb=3RB2283-4AA1

Service&Support (Manuals, Certificates, Characteristics, FAQs,...)
https://support.industry.siemens.com/cs/ww/en/ps/3RB2283-4AA1

Image database (product images, 2D dimension drawings, 3D models, device circuit diagrams, EPLAN macros, ...)
http://www.automation.siemens.com/bilddb/cax_de.aspx?mlfb=3RB2283-4AA1&lang=en

Characteristic: Tripping characteristics, I²t, Let-through current
https://support.industry.siemens.com/cs/ww/en/ps/3RB2283-4AA1/char

Further characteristics (e.g. electrical endurance, switching frequency)
http://www.automation.siemens.com/bilddb/index.aspx?view=Search&mlfb=3RB2283-4AA1&objecttype=14&gridview=view1

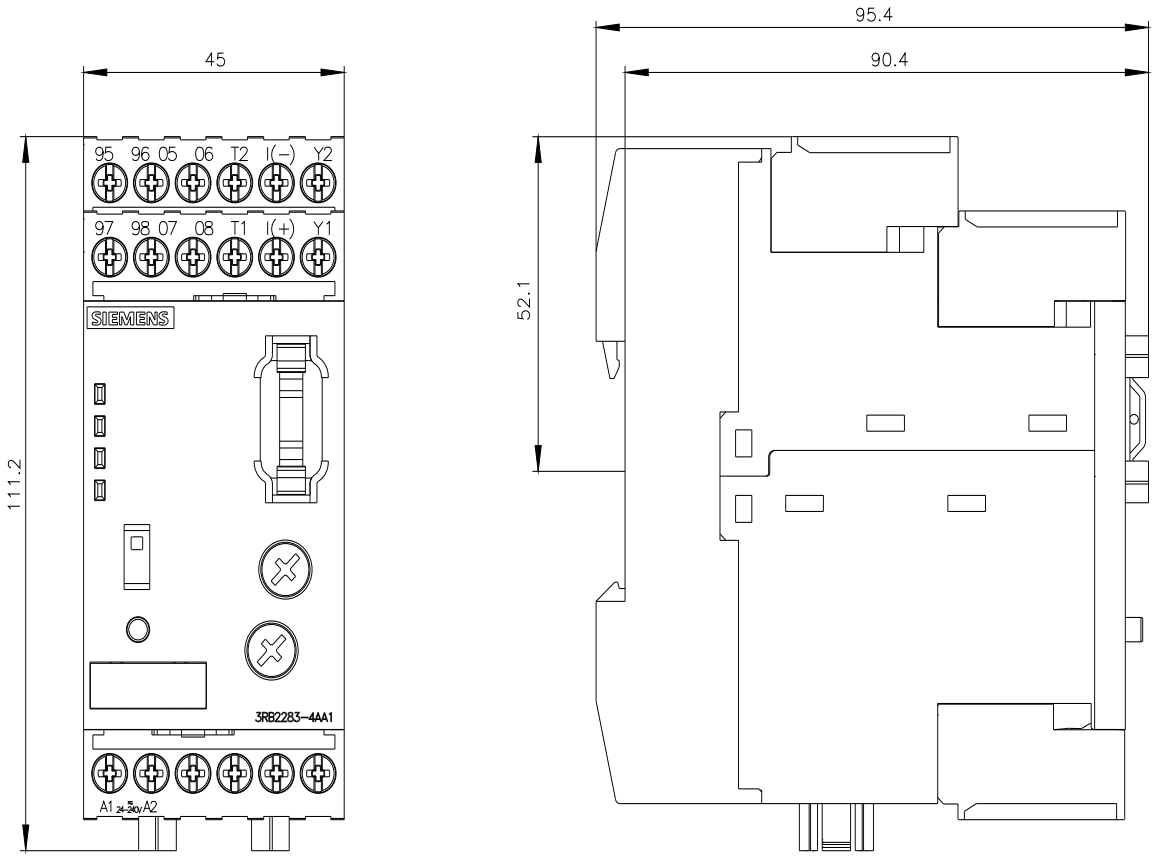

Subject to change without notice
© Copyright Siemens

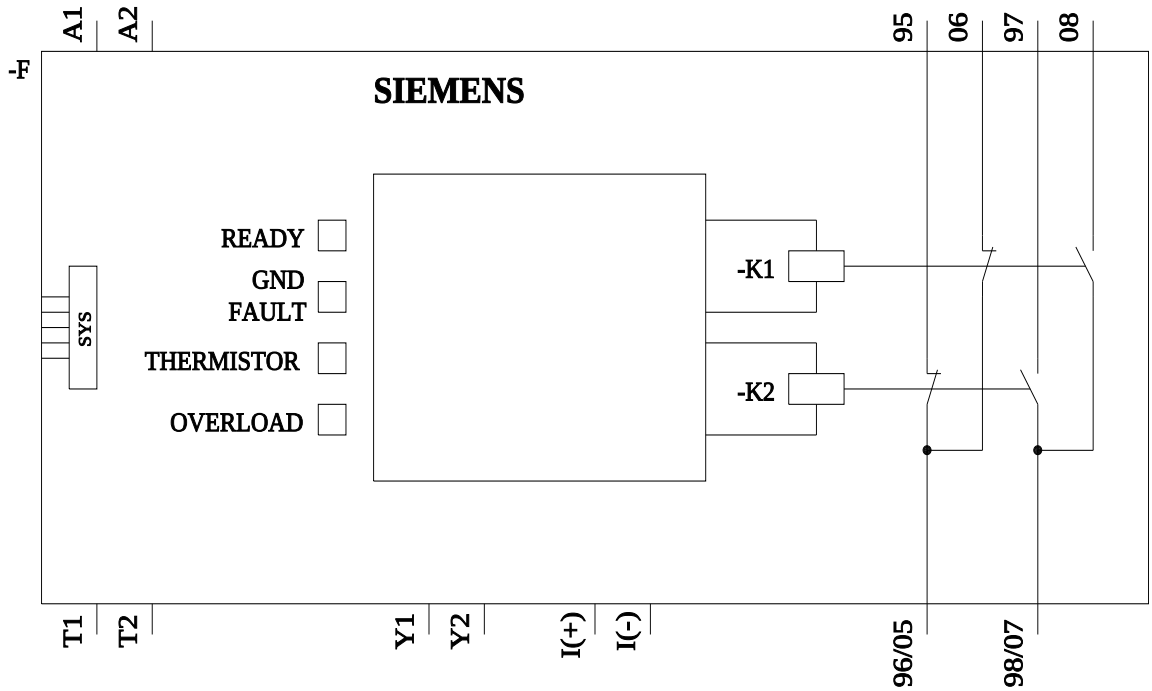

last modified: 2/9/2022

Subject to change without notice
© Copyright Siemens